Protected copyright. Copying for private or commercial purposes, in part or in whole, is not permitted unless authorised by Volkswagen AG. Volkswagen AG does not guarantee or accept any liability with respect to the correctness of information in this document. Copyright by Volkswagen AG.

Repair Manual

Golf Variant 2007 ➤
Golf Variant 2010 ➤
Jetta 2005 ➤
Jetta 2011 ➤

6-Speed Automatic Transmission 09G

Edition 07.2015

List of Workshop Manual Repair Groups

Protected by copyright. Copying for private or commercial purposes, in part or in whole, is not permitted unless authorised by Volkswagen AG. Volkswagen AG does not guarantee or accept any liability with respect to the correctness of information in this document. Copyright by Volkswagen AG.

Repair Group

00 - General, Technical Data
32 - Torque Converter
37 - Controls, Housing
38 - Gears, Hydraulic Controls
39 - Final Drive, Differential

Technical information should always be available to the foremen and mechanics, because their careful and constant adherence to the instructions is essential to ensure vehicle road-worthiness and safety. In addition, the normal basic safety precautions for working on motor vehicles must, as a matter of course, be observed.

All rights reserved.
No reproduction without prior agreement from publisher.

Copyright © 2015 Volkswagen AG, Wolfsburg

Contents

00 - General, Technical Data . . . 1

1 General Repair Information . . . 1
1.1 Torque Converter . . . 1
1.2 ATF . . . 1
1.3 Transmission Control Module J217 with Fuzzy Logic . . . 1
1.4 Vehicle Control Modules . . . 2
1.5 Information on the “Transmission 09G” . . . 2
1.6 Tools . . . 2
1.7 Transmission . . . 2
1.8 Seals, Gaskets and Oil . . . 3
1.9 Bolts and Nuts . . . 4
1.10 Electrical Components . . . 4
1.11 Guided Fault Finding, OBD and Test Instruments . . . 4
1.12 Safety Precautions . . . 4
2 Transmission Identification . . . 5
2.1 Identification on Transmission . . . 5
3 Capacities . . . 6
3.1 Planetary Gear and Final Drive . . . 6
4 Engine Codes - Engine Allocation . . . 7
5 Special Tools . . . 8

32 - Torque Converter . . . 9

1 Overview - Torque Converter . . . 9
1.1 Torque Converter, Removing and Installing . . . 10
1.2 Torque Converter, Checking . . . 10
1.3 Torque Converter, Discharging . . . 11
1.4 Torque Converter Seal, Removing and Installing . . . 11
2 Special Tools . . . 12

37 - Controls, Housing . . . 13

1 »Tester«, Connecting . . . 13
2 Electrical and Electronic Components and Component Locations . . . 14
3 Multifunction Transmission Range Switch F125 . . . 20
3.1 Multifunction Transmission Range Switch F125 , Removing . . . 20
3.2 Multifunction Transmission Range Switch F125 , Installing . . . 21
3.3 Multifunction Transmission Range Switch F125 , Adjusting . . . 22
4 Selector Mechanism through 02/2009 . . . 24
4.1 Overview - Selector Mechanism through 02/2009 . . . 24
4.2 Shift Mechanism with Selector Lever, Removing and Installing, through 02/2009 . . . 26
4.3 Selector Lever Cable, Removing and Installing, through 02/2009 . . . 28
4.4 Selector Lever Cable, Checking . . . 37
4.5 Selector Lever Cable, Adjusting . . . 38
4.6 Selector Lever, Emergency Release . . . 39
4.7 Selector Lever Handle, Removing and Installing . . . 40
4.8 Button in Handle, Moving into Installation Position . . . 42
4.9 Selector Mechanism, Checking . . . 44
5 Selector Mechanism from 03/2009 . . . 46
5.1 Overview - Selector Mechanism from 03/2009 . . . 46
5.2 Selector Mechanism, Removing and Installing, Vehicles from 03/2009 . . . 47
6 Transmission, Removing and Installing, Jetta from 2005, Golf Wagon from 2007, Jetta Wagon from 2008 . . . 55

Protected by copyright. Copyright by Volkswagen AG. Volkswagen AG does not guarantee or accept any liability with respect to the correctness of information in this document. Copying for private or commercial purposes, in part or in whole, is not permitted unless authorised by Volkswagen AG.

6.1 Transmission, Removing, Vehicles with 2.0L - 85kW and 2.0L - 110kW Engines 55
6.2 Transmission, Installing, Vehicles with 2.0L - 85kW and 2.0L - 110kW Engines 60
6.3 Transmission, Removing, Vehicles with 2.5L - 110 kW and 2.5L -125 kW Engines 63
6.4 Transmission, Installing, Vehicles with 2.5L - 110 kW and 2.5L - 125 kW Engines 69
6.5 Tightening Specifications, Transmission to Engine 71
7 Transmission, Removing and Installing, Jetta from MY 2011 74
7.1 Transmission, Removing, Jetta MY 2011 1.6L 77 kW 74
7.2 Transmission, Removing, Jetta MY 2011, 2.0L 85 kW 82
7.3 Transmission, Removing, Jetta MY 2011, 2.5L 125 kW 91
7.4 Transmission, Installing, Jetta MY 2011 100
7.5 Tightening Specifications, Transmission to Engine 102
8 Transmission, Transporting 106
9 Transmission, Securing in Engine/Transmission Holder 107
10 ATF Cooler 108
10.1 Overview - ATF Cooler Round Version 108
10.2 Overview - ATF Cooler Rectangular Version 109
11 ATF Level, Checking and Filling 112
11.1 ATF Level, Checking 113
11.2 ATF, Filling 114
11.3 ATF, Draining and Filling 115
12 Special Tools 117

38 - Gears, Hydraulic Controls 124

1 Selector Shaft Seal, Replacing 124
2 Transmission Fluid Pan 125
2.1 Transmission Fluid Pan, Removing and Installing 125
3 ATF Screen 127
3.1 ATF Screen, Removing and Installing 127
4 Valve Body 128
4.1 Overview - Valve Body 128
4.2 Valve Body, Removing and Installing 135
4.3 Solenoid Valve Wiring Harness (14-Pin Connector), Removing and Installing 148
4.4 Sensor Wiring Harness (8-Pin Connector), Removing and Installing 149
4.5 Transmission Input Speed Sensor G182 , Removing and Installing 150
4.6 Transmission Output Speed Sensor G195 , Removing and Installing 151
5 Special Tools 153

39 - Final Drive, Differential 155

1 Flange Shaft Seals, Replacing 155
1.1 Component Location Overview - Seals 155
1.2 Left Flange Shaft Seal, Replacing 156
1.3 Right Flange Shaft Seal, Replacing 157
2 Special Tools 159
3 Revision History 160

Protected by copyright. Copyright by Volkswagen AG. Volkswagen AG does not guarantee or accept any liability with respect to the correctness of information in this document. Copyright by Volkswagen AG. Volkswagen AG authorised by Volkswagen AG. Reproduction in any form or by any means is not permitted without written authorisation of Volkswagen AG.

00 – General, Technical Data

1 General Repair Information

(Edition 07.2015)

⇒ “1.1 Torque Converter”, page 1

⇒ “1.2 ATF”, page 1

⇒ “1.3 Transmission Control Module J217 with Fuzzy Logic”, page 1

⇒ “1.4 Vehicle Control Modules”, page 2

⇒ “1.5 Information on the Transmission 09G ”, page 2

⇒ “1.6 Tools”, page 2

⇒ “1.7 Transmission”, page 2

⇒ “1.8 Seals, Gaskets and Oil”, page 3

⇒ “1.9 Bolts and Nuts”, page 4

⇒ “1.10 Electrical Components”, page 4

⇒ “1.11 Guided Fault Finding, OBD and Test Instruments”, page 4

⇒ “1.12 Safety Precautions”, page 4

The highest level of care and cleanliness along with tools that function properly are required to ensure a proper and successful transmission repair. The usual basic safety precautions also apply when carrying out vehicle repairs.

General information that applies to various different repair procedures is listed here instead of repeating it multiple times throughout the manual. They apply to this repair manual.

1.1 Torque Converter

The torque converter is equipped with a lock-up clutch. The lock-up clutch closes depending on load and speed. The 2nd, 3rd, 4th, 5th and 6th gears can be mechanically driven (without slip).

1.2 ATF

ATF is a permanent filling. The ATF does not need to be replaced during maintenance.

Use only the ATF listed as a replacement part in the Parts Catalog. Other oils can cause malfunctions or transmission failure.

The ATF levels inside the planetary gear and inside the final drive are checked and filled at the same time.

1.3 Transmission Control Module - J217- with Fuzzy Logic

Determining the driving situation and driving resistance dependent shift point occurs automatically.

Advantages:

- It is shifted depending on fuel consumption
- Maximum engine output is always available
- Individual adaptation of shift points in all driving situations
- Gear shift points are infinitely variable

Protected by copyright. Copying or distribution of this document, or any part thereof, is not permitted without authorisation by Volkswagen AG. Volkswagen AG does not guarantee or accept any liability with respect to the correctness of information in this document. Copyright by Volkswagen AG.

1.4 Vehicle Control Modules

The component locations of all vehicle control modules and other useful information can also be found in ⇒ Wiring diagrams, Troubleshooting & Component locations.

1.5 Information on the “Transmission 09G”

Transmission Design and Function

- Refer to Multimedia Training; Automatic Transmission 09G.
- Refer to Self Study Program Automatic Transmission 09G.

1.6 Tools

A complete list of special tools and workshop equipment required for repair procedures in a manual can be found at the beginning of each Repair Group section and in the Workshop Equipment and Special Tools catalog.

Uncertainties often exist on smaller bolts with lower tightening specifications. For these bolts the Torque Wrench 1783 - 2-10Nm - VAG1783- can be used.

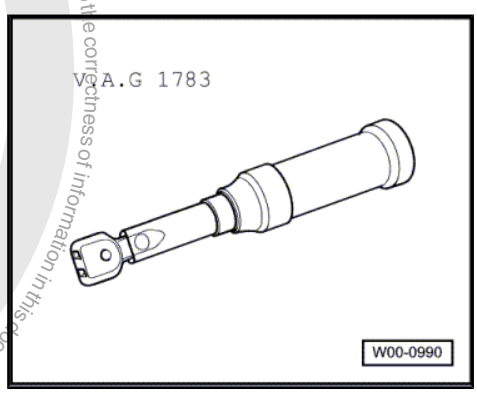

1.7 Transmission

The “6-speed automatic transmission 09G” has six hydraulically controlled forward gears. By passing the torque converter slip, 2nd, 3rd, 4th, 5th and 6th gears become mechanically driven gears if lock-up clutch is closed.

- Do not run the engine and do not tow the vehicle if the transmission cover is removed or if there is no transmission fluid inside the transmission.
- Thoroughly clean the connection points and the area around them first, and then loosen them.
- When installing the transmission, make sure the alignment sleeves are seated correctly between the engine and the transmission.
- Place the removed parts on a clean surface and cover them so that they do not become contaminated. Use foil and paper. Only use lint-free cloths.
- Only install clean parts: Remove the replacement parts from their packaging just before installing them.
- Carefully cover or seal opened components if repairs are not performed immediately.
- With the transmission removed, secure the torque converter so that it cannot fall out.

Transmission with and without Filler Tube

Illustrated here, for »example,« is filler tube as it was installed in »older« transmissions. This tube has been omitted.

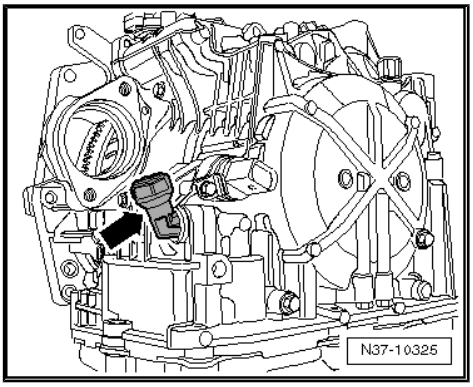

The »old« filler hole with the red cap is not needed because the ATF is drained and filled at the lower hole when necessary. The »height« of this rising tube corresponds to the height of the ATF level.

To drain, the overflow pipe is removed.

- After installing, check the ATF level and fill. Refer to ⇒ “11 ATF Level, Checking and Filling”, page 112 .
- Capacities. Refer to ⇒ “3 Capacities”, page 6 .

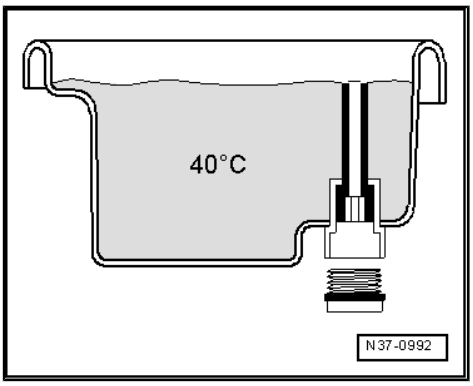

1.8 Seals, Gaskets and Oil

- Always replace the O-rings, gaskets and seals.
- Flange shaft, torque converter and selector shaft gaskets are illustrated as shaft seals.
- After removing the gaskets and seals, check the contact surfaces on the housing or shaft for burrs resulting from removal or damage.
- Coat the O-rings with ATF before inserting to prevent crushing rings during assembly.
- Only use ATF. Other lubricants cause malfunctions in the hydraulic transmission control.
- Before installing the seals, lightly oil the outer circumference and fill the space between the sealing lips -arrow- halfway with Grease - G 052 128 A1- .
- The open side of the gaskets point toward the fluid to be sealed in.
- Check the ATF level after installing. Refer to ⇒ “11 ATF Level, Checking and Filling”, page 112 .

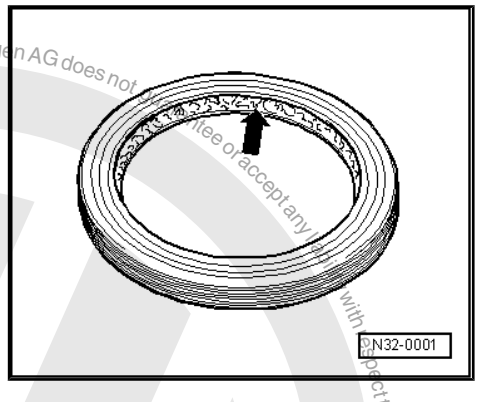

> **Caution**
>
> ***Be cautious when handling ATF. Dispose of drained fluid properly.***

Protected by copyright. Copying for private or commercial purposes, partially or completely is not permitted unless authorised by Volkswagen AG. Volkswagen AG does not guarantee or accept any liability with respect to the correctness of information in this document. Copyright by Volkswagen AG.

Volkswagen AG. Volkswagen AG does not guarantee or accept any liability with respect to the correctness of information in this document. Copyright by Volkswagen AG. All rights reserved. Distribution, publication, copy and commercial purposes, in part or in whole, is not permitted unless authorised by Volkswagen AG.

1.9 Bolts and Nuts

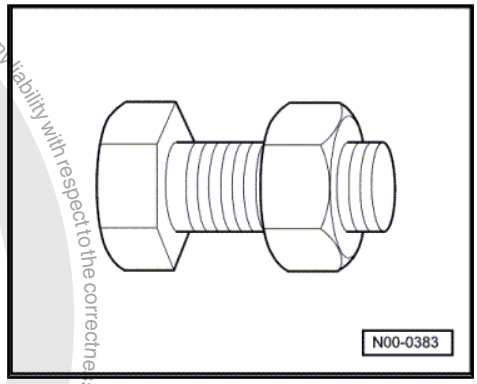

- Loosen or tighten the bolts and nuts on the covers or housings diagonally.
- The tightening specifications given apply to unoiled bolts and nuts.
- Use a wire brush to clean the threads of the bolts that were installed with locking fluid. Install the bolts with Locking Fluid - AMV 185 101 A1- .
- Clean the threaded holes for the self-locking bolts or for the bolts coated with locking fluid (for example with a thread tap). Otherwise there is the risk that the bolts could break off the next time they are removed.
- Always replace self-locking bolts and nuts.

1.10 Electrical Components

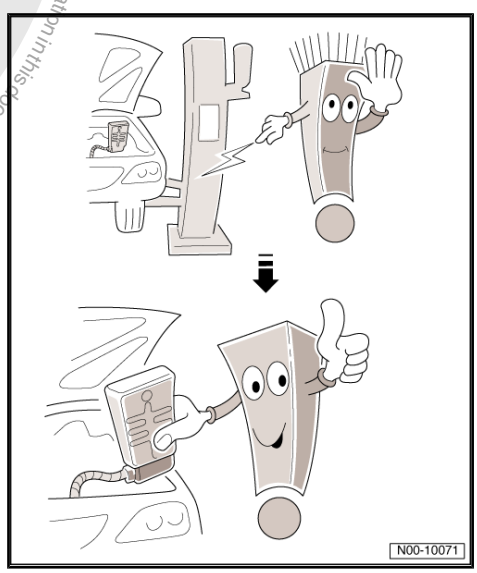

Almost everyone has been shocked at one time or another when coming into contact with a metal object. The reason for this is the build-up of static electricity in the human body. This charge can damage the electrical components in the transmission and the selector mechanism when touching them.

– Touch a grounded object, such as a water line or a hoist, before working on electrical components. Do not touch the connector terminals or »open« electronic components directly.

1.11 Guided Fault Finding, OBD and Test Instruments

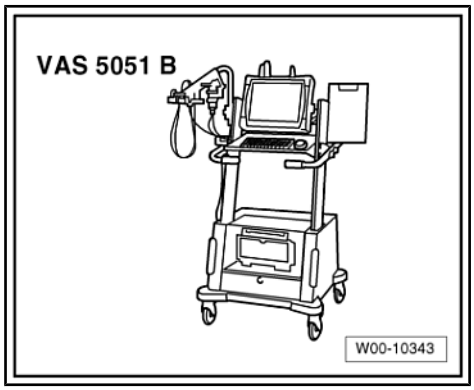

Before beginning any repair work on the automatic transmission, determine the cause of the damage using “Guided Fault Finding”.

Perform `Guided Fault Finding` using, for example a Vehicle Diagnostic Tester . Refer to
⇒ “1 Tester, Connecting”, page 13 .

The `Guided Functions` finds the ATF temperature quickly. Refer to ⇒ “1 Tester, Connecting”, page 13 .

1.12 Safety Precautions

Pay Attention to the Following to Avoid Personal Injury and Vehicle Damage:

> ⚠ WARNING
>
> *Risk of injury and accident by accidentally engaging a gear with the engine running.*
>
> - *Move the selector lever into “P” and set the parking brake before working with the engine running.*

2 Transmission Identification

⇒ “2.1 Identification on Transmission”, page 5

The “6-speed automatic transmission 09G” in installed in the Jetta from MY 2005, the Bore from MY 2006, the Golf Wagon from MY 2007, the Jetta Wagon from MY 2008 and the Jetta MY 2011.

Transmission allocation to the engine. Refer to
⇒ “4 Engine Codes - Engine Allocation”, page 7 .

2.1 Identification on Transmission

Code letters -arrow-

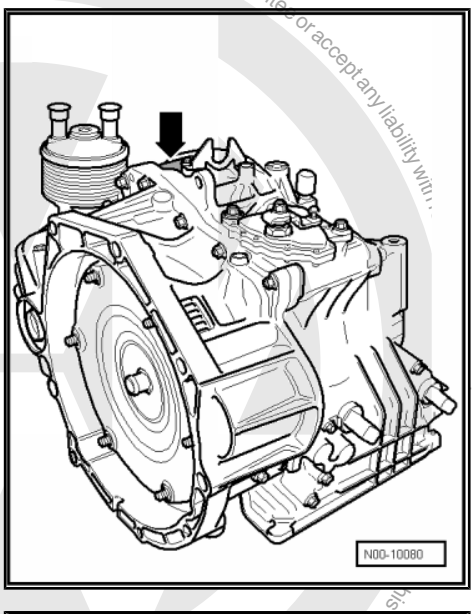

Code letter -arrow 1-

“Automatic transmission 09G - 6-speed” -arrow 2-

Example:

MAN	24	06	10
I	I	I	I
Codes	Day	Month	Production year -2010-

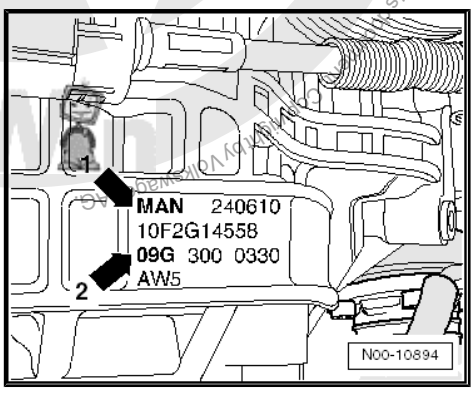

The transmission code is also listed on the vehicle data label.

Protected by copyright. Copying for private or commercial purposes, in part or in whole, is not permitted unless authorised by Volkswagen AG. Volkswagen AG does not guarantee or accept any liability with

3 Capacities

⇒ “3.1 Planetary Gear and Final Drive”, page 6

3.1 Planetary Gear and Final Drive

Capacities	“6-Speed Automatic Transmission 09G”
Original filling by the manufacturer	Refer to ⇒ Fluid Capacity Tables; Rep. Gr. 03
Filling after draining in service	Refer to ⇒ Fluid Capacity Tables; Rep. Gr. 03 the replacement capacity may differ depending on the engine
Change	♦ No change ♦ Permanent fill; only change after repairs for example when removing the ATF pan
Grease	ATF is available as a replacement part. Therefore the part numbers are also located in the Parts Catalog.

Protected by copyright. Copying for private or commercial purposes, in part or in whole, is not permitted unless authorised by Volkswagen AG. Volkswagen AG does not guarantee or accept any liability with respect to the correctness of information in this document. Copyright by Volkswagen AG.

4 Engine Codes - Engine Allocation

If original parts are needed for a repair, always pay attention to the transmission codes.

"Automatic Transmission 09G"				
Codes	»GKC«, »HFX«, »KGQ«, »MAM«, »«	»HFT«, »HTP«, »JUH«, »KGK«	»HDN«, »HFU«, »HRM«, »JUJ«	»KBV«, »KGL«, »MAN«, »PDW«
Engine	2.0L - 85 kW	2.0L - 110 kW (FSI)	2.5L - 110 kW	2.5L - 125 kW

Protected by copyright. Copying for private or commercial purposes, in part or in whole, is not permitted unless authorised by Volkswagen AG. Volkswagen AG does not guarantee or accept any liability with respect to the correctness of information in this document. Copyright by Volkswagen AG.

5 Special Tools

Special tools and workshop equipment required

- Torque Wrench 1783 - 2-10Nm - VAG1783-

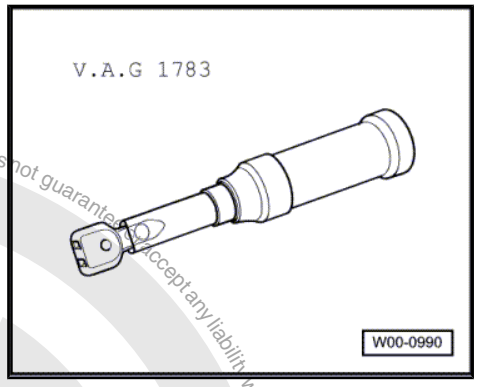

Protected by copyright. Copying for private or commercial purposes, in part or in whole, is not permitted unless authorised by Volkswagen AG. Volkswagen AG does not guarantee or accept any liability with respect to the correctness of information in this document. Copyright by Volkswagen AG.

32 – Torque Converter

1 Overview - Torque Converter

⇒ “1.1 Torque Converter, Removing and Installing”, page 10

⇒ “1.2 Torque Converter, Checking”, page 10

⇒ “1.3 Torque Converter, Discharging”, page 11

⇒ “1.4 Torque Converter Seal, Removing and Installing”, page 11

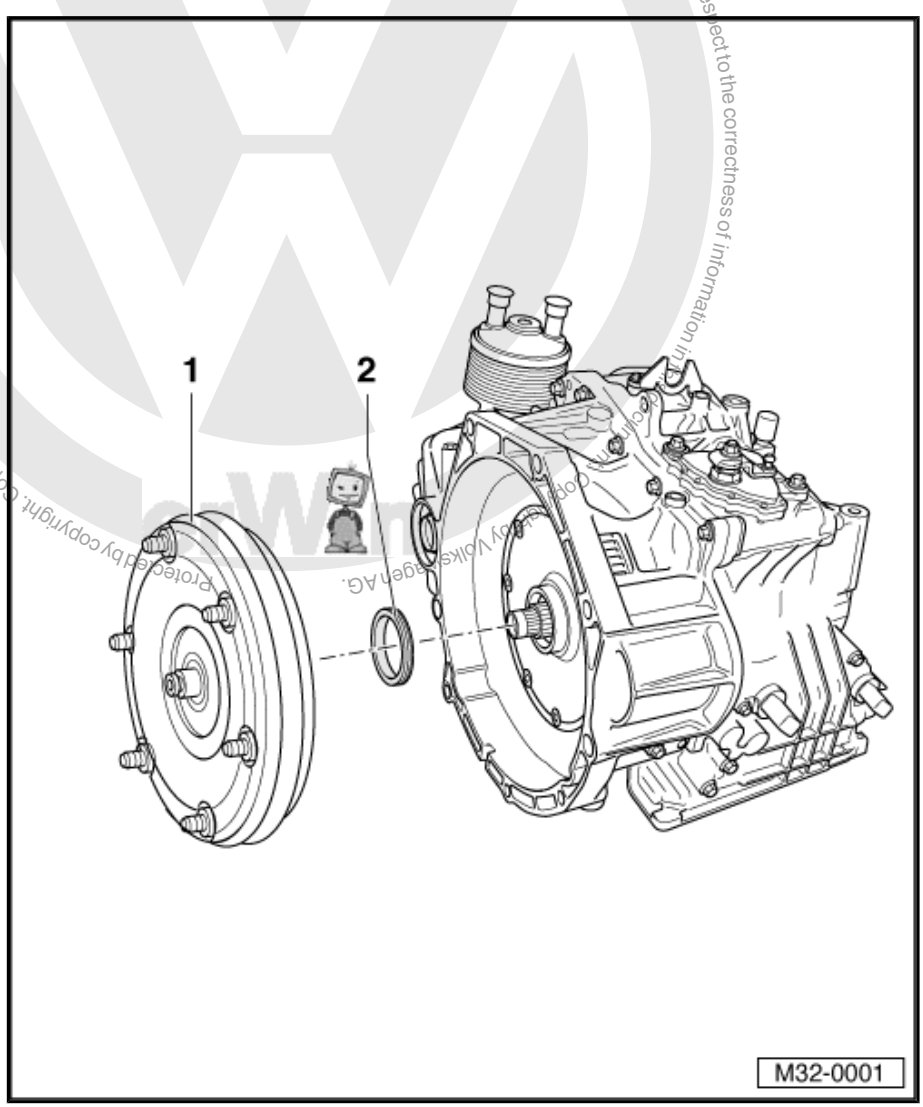

1 - Torque Converter

- ❑ Secure the torque converter from falling when the transmission is removed or during transport. Refer to ⇒ Fig. ““Secure the Torque Converter from Falling Out.”“ , page 10
- ❑ There are different torque converters.
- ❑ Use the code letters to identify them. Refer to the Parts Catalog.
- ❑ Removing and installing. Refer to ⇒ “1.1 Torque Converter, Removing and Installing”, page 10 .
- ❑ Checking. Refer to ⇒ “1.2 Torque Converter, Checking”, page 10 .
- ❑ Draining. Refer to ⇒ “1.3 Torque Converter, Discharging”, page 11 .

2 - Seal

- ❑ For the torque converter
- ❑ Replacing. Refer to ⇒ “1.4 Torque Converter Seal, Removing and Installing”, page 11 .

Protected by copyright. Copying for private or commercial purposes, in part or in whole, is not permitted unless authorised by Volkswagen AG. Volkswagen AG does not guarantee or accept any liability with respect to the correctness of information in this document.

Secure the Torque Converter from Falling Out.

– Secure the torque converter with a wire -A- to prevent it from falling when being transported.

Unsecured torque converters can slide out if the transmission is tipped.

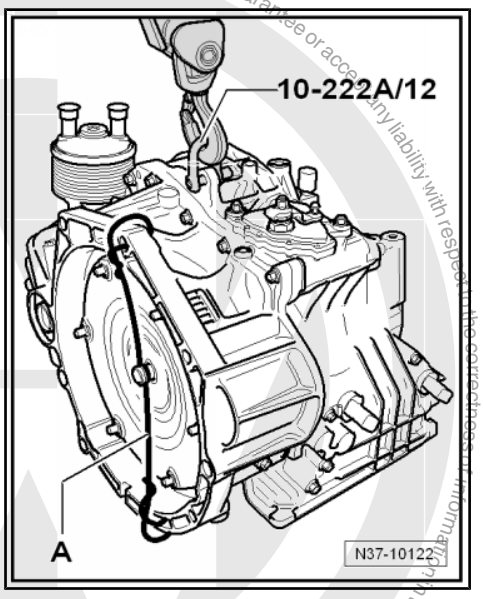

1.1 Torque Converter, Removing and Installing

Removing

- Transmission is removed.

– Carefully remove the torque converter from the transmission.

Installing

– Press torque converter hub carefully through the seal until the first stop.

– Lightly press the torque converter toward the transmission and turn it until the opening on torque converter hub -arrow- engage in the driver on ATF pump gear and torque converter slides inward noticeably.

The converter is installed correctly if it is easy to turn is by hand and if it fits evenly deep in the transmission.

Caution

If the engine and transmission are connected with force when the torque converter is installed incorrectly, damage to the transmission and torque converter results.

1.2 Torque Converter, Checking

– Check the torque converter hub -arrow- for wear grooves.

Note

The torque converter is welded together and must be replaced as a complete unit if it is damaged or faulty.

Protected by copyright. Copying for private or commercial purposes, in part or in whole, is not permitted unless authorised by Volkswagen AG. Volkswagen AG does not guarantee or accept any liability with respect to the correctness of information in this document. Copyright by Volkswagen AG.

1.3 Torque Converter, Discharging

Special tools and workshop equipment required

- Used Oil Collection and Extraction Unit - SMN372500-

Drain the torque converter as follows if the ATF is contaminated:

– Extract the ATF from the torque converter using the Used Oil Collection and Extraction Unit - SMN372500- and the oil extraction sensor.

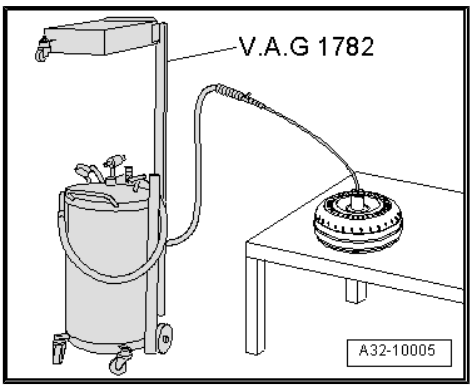

1.4 Torque Converter Seal, Removing and Installing

Special tools and workshop equipment required

- Seal Installer - Torque Converter Seal - T10175-
- Puller - Seal Lever - VW681-

Removing

– Pry out the seal with the Puller - Seal Lever - VW681- .

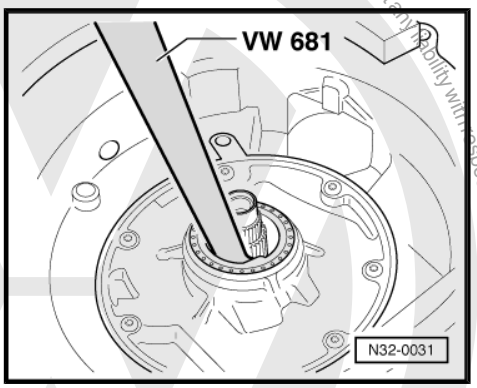

Installing

– Coat the outer circumference and the sealing lips on the new seal with ATF.

• Installation position: open side of the seal toward the transmission.

– Install the seal using the Seal Installer - Torque Converter Seal - T10175- until it is flush.

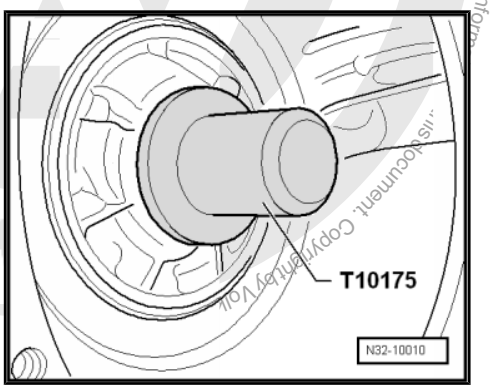

Protected by copyright. Copying for private or commercial purposes, in part or in whole, is not permitted unless authorised by Volkswagen AG. Volkswagen AG does not guarantee or accept any liability with respect to the correctness of information in this document. Copyright by VW

2 Special Tools

Special tools and workshop equipment required

- Used Oil Collection and Extraction Unit - SMN372500-

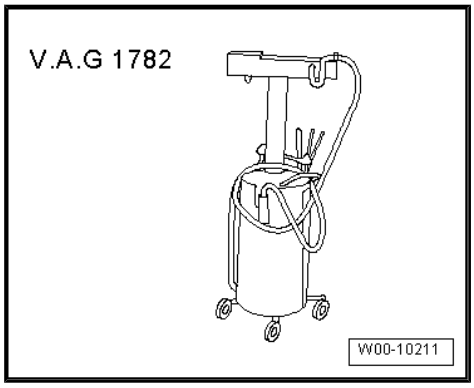

- Seal Installer - Torque Converter Seal - T10175-

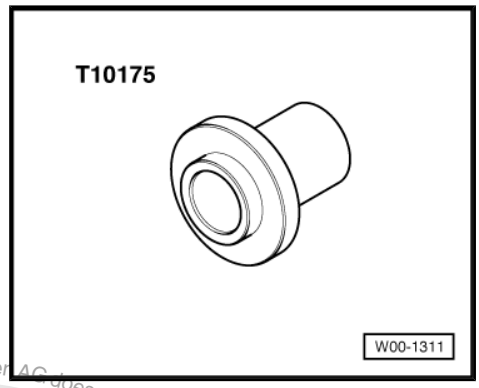

- Puller - Seal Lever - VW681-

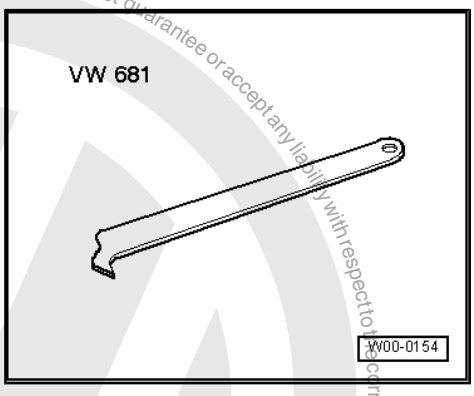

Protected by copyright. Copying for private or commercial purposes, in part or in whole, is not permitted unless authorised by Volkswagen AG. Volkswagen AG does not guarantee or accept any liability with respect to the correctness of information in this document. Copyright by Volkswagen AG.

37 – Controls, Housing

1 »Tester«, Connecting

- Vehicle Diagnostic Tester

The operation of these »devices« is described in the respective owner's manuals.

Connecting the Vehicle Diagnostic Tester to the Data Link Connector.

> ⚠ WARNING
>
> - *During a road test, always secure testing and measuring equipment on the rear seat.*
> - *Only a passenger may use the equipment during the road test.*

– Turn on the Vehicle Diagnostic Tester .

The Vehicle Diagnostic Tester is ready for use when it is possible to select between the fields/buttons `Guided Functions` and `Guided Functions` on the »right« side of the screen.

Depending on equipment and tester version, additional functions may be »displayed«, for example:

- `ElsaWin`
- `Measuring Equipment`
- `On Board Diagnostics (OBD)`

The »Tester« is Now Ready to be Used.

– Switch the ignition on.

– Touch a field/button on the screen to start desired function.

Protected by copyright. Copying for private or commercial purposes, in part or in whole, is not permitted unless authorised by Volkswagen AG. Volkswagen AG does not guarantee or accept any liability with respect to the correctness of information in this document. Copyright by Volkswagen AG.

2 Electrical and Electronic Components and Component Locations

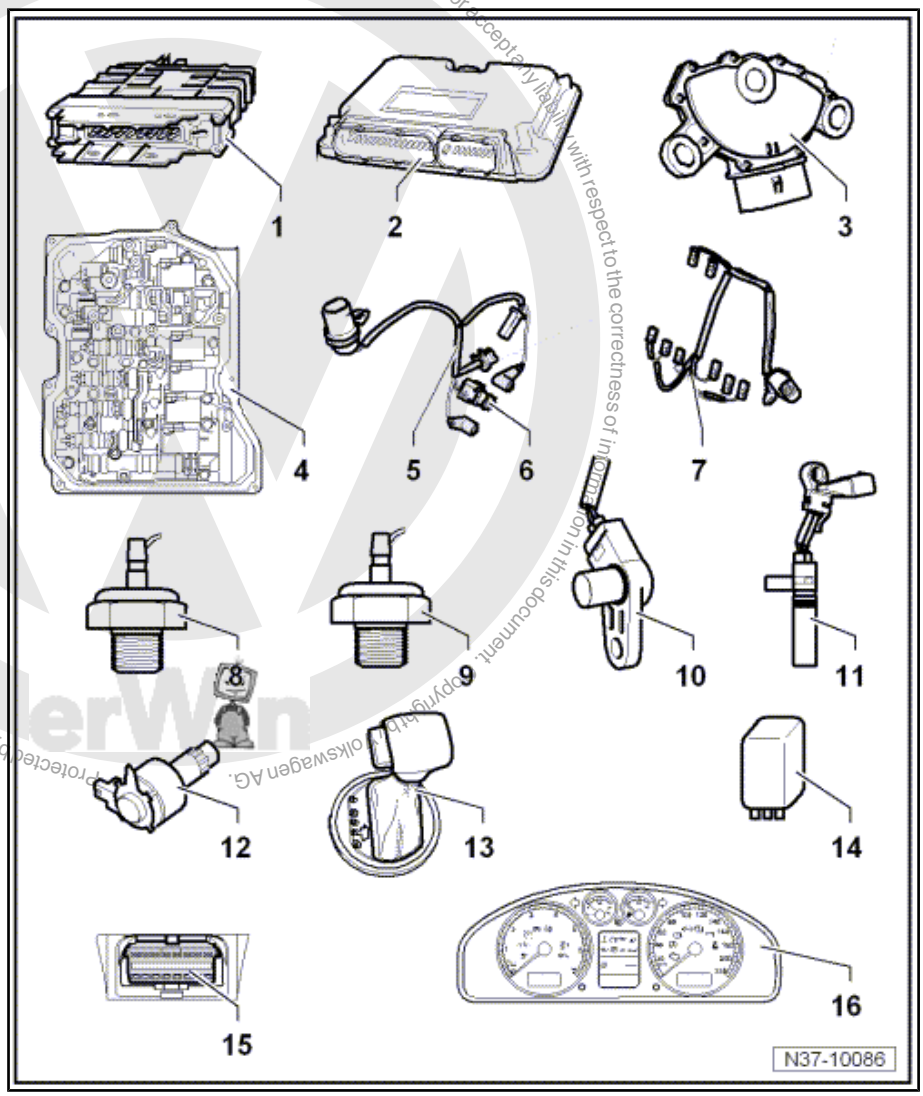

1 - Transmission Control Module - J217-

- The control module sends and receives data from the Data bus.
- Component location on the Jetta from MY 2005, Bora from 2006, Golf Wagon from 2007, Jetta Wagon from 2008. Refer to ⇒ Fig. "" Transmission Control Module - J217- -arrow- on the Jetta from MY 2005, the Bora from MY 2006, the Golf Wagon from MY 2007 and the Jetta Wagon from MY 2008"" , page 16
- Component location on the Jetta, from MY 2011, with a 1.8L or 2.0L Engine. Refer to ⇒ Fig. "" Transmission Control Module - J217- -A- on the Jetta from MY 2011 with 2.0L - 85 kW and 1.8L - 125 kW Engine"" , page 16 .
- Component location on the Jetta, from MY 2011, with a 2.5L - 125 kW engine. Refer to ⇒ Fig. "" Transmission Control Module - J217- -A- on the Jetta from MY 2011, with a 2.5L 125 kW Engine"" , page 16 .
- Can be checked in "Guided Fault Finding" using the Vehicle Diagnostic Tester .

2 - Engine Control Module

- The control module sends and receives data from the Data bus
- Component location, Removing and installing. Refer to ⇒ Rep. Gr. 23 and ⇒ Rep. Gr. 24 .

3 - Multifunction Transmission Range Switch - F125-

- Component location. Refer to ⇒ Fig. "" Multifunction Transmission Range Switch -F125- "" , page 16
- Can be checked in "Guided Fault Finding" using the Vehicle Diagnostic Tester .
- Removing, installing and adjusting. Refer to ⇒ "3 Multifunction Transmission Range Switch F125 ", page 20 .

4 - Valve Body

- Component location. Refer to ⇒ Fig. ""Valve Body"" , page 17
- The components can be checked in "Guided Fault Finding" using the Vehicle Diagnostic Tester .
- Allocation. Refer to the Parts Catalog.

5 - Sensor Wiring Harness

- 8-pin wiring harness

- With Transmission Fluid Temperature Sensor - G93-
- Component location. Refer to ⇒ Fig. ""Sensor Wiring Harness"" , page 17
- Removing and installing. Refer to
  ⇒ "4.4 Sensor Wiring Harness (8-Pin Connector), Removing and Installing", page 149 .
- Allocation. Refer to the Parts Catalog.

6 - Transmission Fluid Temperature Sensor - G93-

- Component location. Refer to ⇒ Fig. ""Sensor Wiring Harness"" , page 17
- Can be checked in "Guided Fault Finding" using the Vehicle Diagnostic Tester .

7 - Solenoid Valve Wiring Harness

- Wiring harness, 14-pin
- Component location. Refer to ⇒ Fig. ""Solenoid Valve Wiring Harness"" , page 17
- Removing and installing. Refer to
  ⇒ "4.3 Solenoid Valve Wiring Harness (14-Pin Connector), Removing and Installing", page 148 .
- Allocation. Refer to the Parts Catalog.

8 - Automatic Transmission Hydraulic Pressure Sensor 1 - G193-

- Not installed in all transmissions
- Allocation. Refer to the Parts Catalog.
- Component location. Refer to
  ⇒ Fig. "" Automatic Transmission Hydraulic Pressure Sensor 1 -G193- and Automatic Transmission Hydraulic Pressure Sensor 2 -G194- "" , page 18

9 - Automatic Transmission Hydraulic Pressure Sensor 2 - G194-

- Not installed in all transmissions
- Allocation. Refer to the Parts Catalog.
- Component location. Refer to
  ⇒ Fig. "" Automatic Transmission Hydraulic Pressure Sensor 1 -G193- and Automatic Transmission Hydraulic Pressure Sensor 2 -G194- "" , page 18

10 - Transmission Input Speed Sensor - G182-

- Component location. Refer to
  ⇒ Fig. "" Transmission Input Speed Sensor -G182- and Transmission Output Speed Sensor -G195- "" , page 18
- Removing and installing. Refer to
  ⇒ "4.5 Transmission Input Speed Sensor G182 , Removing and Installing", page 150 .
- Can be checked in "Guided Fault Finding" using the Vehicle Diagnostic Tester .

11 - Transmission Output Speed Sensor - G195-

- Component location. Refer to
  ⇒ Fig. "" Transmission Input Speed Sensor -G182- and Transmission Output Speed Sensor -G195- "" , page 18
- Removing and installing. Refer to
  ⇒ "4.6 Transmission Output Speed Sensor G195 , Removing and Installing", page 151 .
- Can be checked in "Guided Fault Finding" using the Vehicle Diagnostic Tester .

12 - Shift Lock Solenoid - N110-

- Component location: the shift lock solenoid is located in the selector mechanism.
- Can be checked in "Guided Fault Finding" using the Vehicle Diagnostic Tester .

13 - Tiptronic Switch - F189-

- Component location. Refer to ⇒ Fig. "" Tiptronic Switch -F189- "" , page 18
- Can be checked in "Guided Fault Finding" using the Vehicle Diagnostic Tester .

14 - Terminal 50 Power Supply Relay - J682-

- Inside the engine compartment E-box. Refer to ⇒ Wiring diagrams, Troubleshooting & Component locations.

15 - Data Link Connector

- Component location. Refer to ⇒ Fig. ""Data Link Connector"" , page 19

Protected by copyright. Copyright by Volkswagen AG. Volkswagen AG does not guarantee or accept any liability with respect to the correctness of information in this document. Copyright by Volkswagen AG. Copying for private or commercial purposes, in part or in whole, is not permitted unless authorised by Volkswagen AG.

16 - Transmission Range Display - Y6-

- ❑ Component location. Refer to ⇒ Fig. “" Transmission Range Display -Y6- "“ , page 19
- ❑ Removing and installing. Refer to ⇒ Electrical Equipment; Rep. Gr. 90 ; Instrument Cluster .

Transmission Control Module - J217- -arrow- on the Jetta from MY 2005, the Bora from MY 2006, the Golf Wagon from MY 2007 and the Jetta Wagon from MY 2008

Component location: The control module is located in left front wheel housing.

– The wheel housing liner must be removed for the removal and installation.

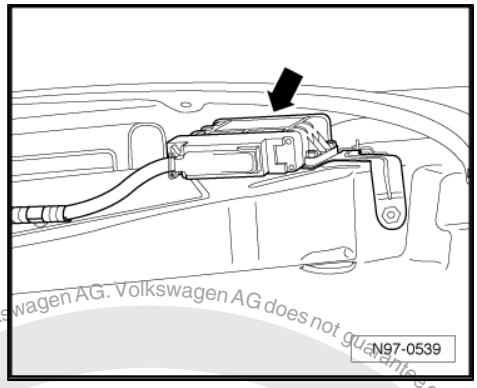

Transmission Control Module - J217- -A- on the Jetta from MY 2011 with 2.0L - 85 kW and 1.8L - 125 kW Engine

Component location: The control module is located in the right plenum chamber.

– For removing and installing the plenum chamber cover must be removed. Refer to ⇒ Body Exterior; Rep. Gr. 50 ; Plenum Chamber Cover; Plenum Chamber Cover; Removing and Installing .

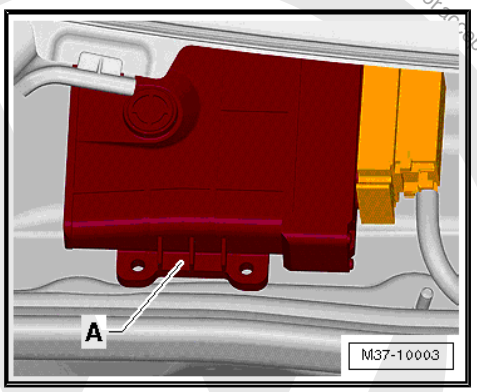

Transmission Control Module - J217- -A- on the Jetta from MY 2011, with a 2.5L 125 kW Engine

Component location: The control module is located inside the engine compartment in the front and on left side next to the battery.

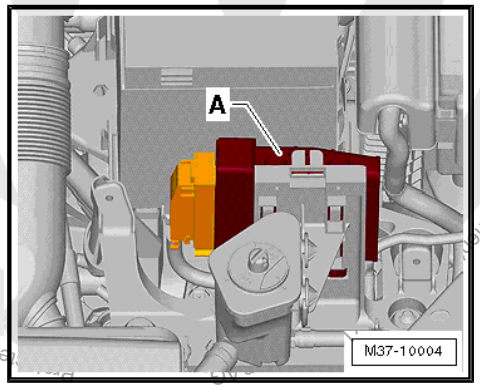

Multifunction Transmission Range Switch - F125-

Component location: The multifunction transmission range switch is located on upper side of the transmission.

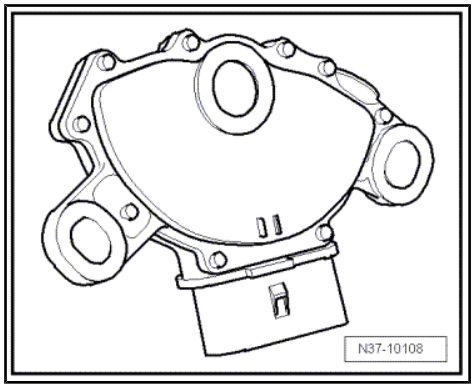

Protected by copyright. Copying for private or commercial purposes, in part or in whole, is not permitted unless authorised by Volkswagen AG. Volkswagen AG does not guarantee or accept any liability with respect to the correctness of information in this document.

Valve Body

Component location: the valve body is bolted to underside of transmission housing and is covered by the transmission fluid pan.

The Solenoid Valve 1 - N88- , Solenoid Valve 2 - N89- , Solenoid Valve 3 - N90- , Solenoid Valve 4 - N91- , Solenoid Valve 5 - N92- , Solenoid Valve 6 - N93- , Solenoid Valve 9 - N282- and Solenoid Valve 10 - N283- are secured on the valve body.

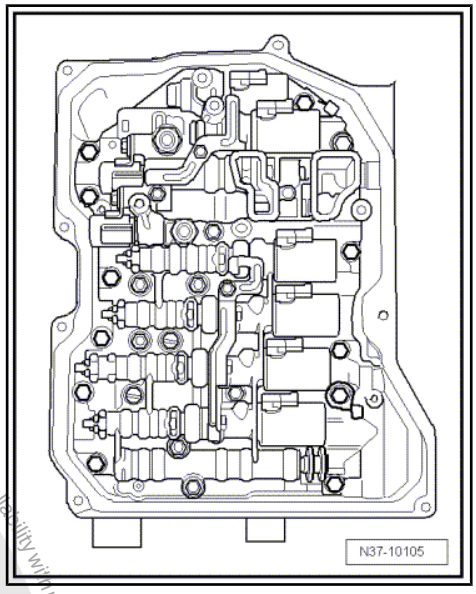

Sensor Wiring Harness

- 8-pin wiring harness
- With integrated Transmission Fluid Temperature Sensor - G93- -arrow-.

Component location: the wiring harness is secured to valve body in the transmission.

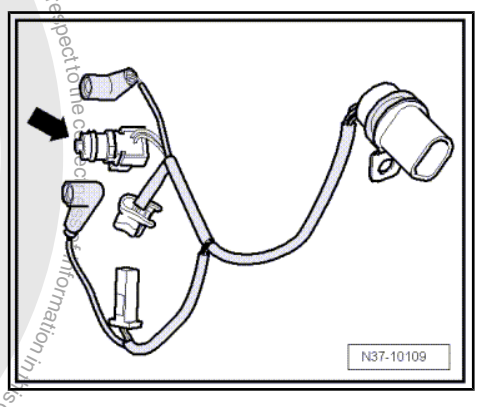

Solenoid Valve Wiring Harness

- Wiring harness, 14-pin

Component location: the wiring harness is secured to valve body in the transmission.

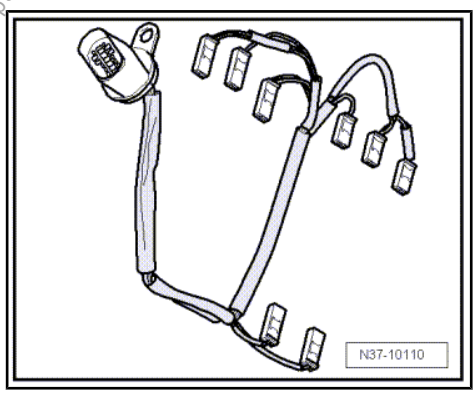

Protected by copyright. Copying for private or commercial purposes, in part or in whole, is not permitted unless authorised by Volkswagen AG. Volkswagen AG does not guarantee or accept any liability with respect to the correctness of information in this document. Copyright by Volkswagen AG.

Automatic Transmission Hydraulic Pressure Sensor 1 - G193- and Automatic Transmission Hydraulic Pressure Sensor 2 - G194-

These sensor are not installed in all transmissions.

Component location:

Automatic Transmission Hydraulic Pressure Sensor 1 - G193- -1- and Automatic Transmission Hydraulic Pressure Sensor 2 - G194- -2- are inside the valve body.

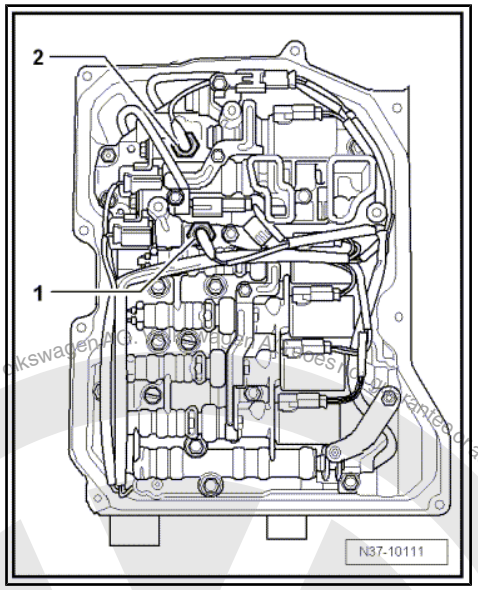

Transmission Input Speed Sensor - G182- and Transmission Output Speed Sensor - G195-

Component location: the sensors are installed above the valve body in the transmission housing.

1 - Transmission Input Speed Sensor - G182-

2 - Transmission Output Speed Sensor - G195-

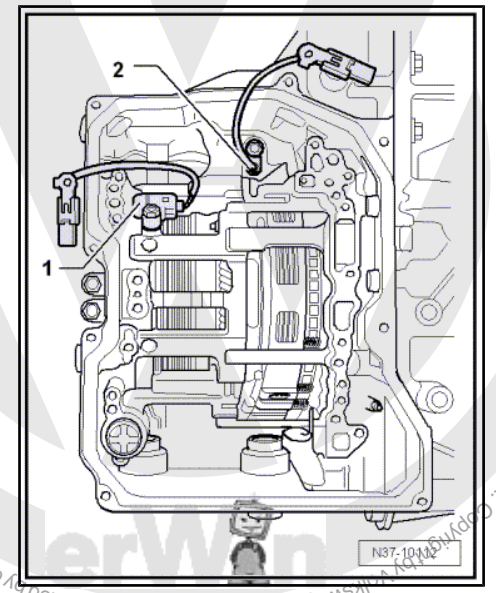

Tiptronic Switch - F189-

Component location: the tiptronic switch is integrated in selector mechanism.

If the vehicle has a multifunction steering wheel, check the buttons on the steering wheel and the corresponding wire connections.

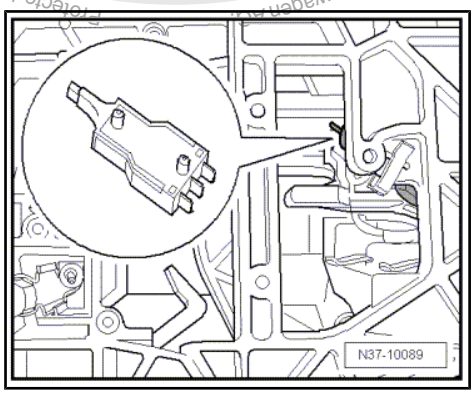

Protected by copyright. Copying for private or commercial purposes, in part or in whole is not permitted unless authorised by Volkswagen AG. Volkswagen AG does not guarantee or accept any liability with respect to the correctness of information in this document. Copyright by Volkswagen AG.

Data Link Connector

Component location: the data link connector -arrow- is located on the left under the driver side storage compartment

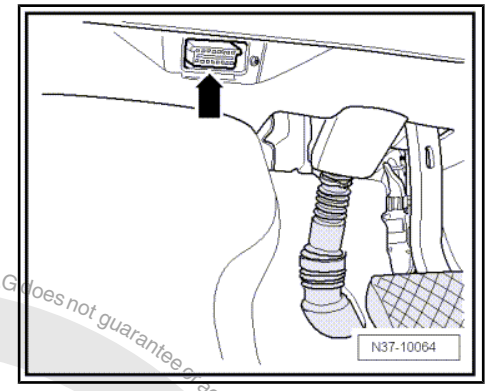

Transmission Range Display - Y6-

Component location: inside the instrument cluster

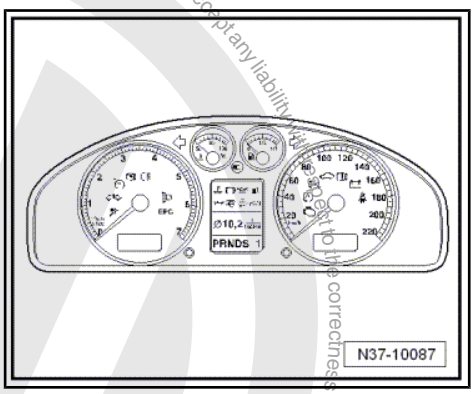

Protected by copyright. Copying for private or commercial purposes, in part or in whole, is not permitted unless authorised by Volkswagen AG. Volkswagen AG does not guarantee or accept any liability with respect to the correctness of information in this document. Copyright by Volkswagen AG.

3 Multifunction Transmission Range Switch - F125-

⇒ “3.1 Multifunction Transmission Range Switch F125 , Removing”, page 20 .

⇒ “3.2 Multifunction Transmission Range Switch F125 , Installing”, page 21 .

⇒ “3.3 Multifunction Transmission Range Switch F125 , Adjusting”, page 22 .

3.1 Multifunction Transmission Range Switch - F125- , Removing

– Move the selector lever into “N”.

– Turn off the ignition.

– If necessary remove the air filter housing:

♦ Gasoline engine. Refer to ⇒ Rep. Gr. 24 ; Air Filter; Air Filter Housing, Removing and Installing .

♦ TDI engine. Refer to ⇒ Rep. Gr. 23 ; Diesel Direct Injection System; Overview - Air Filter .

– To remove the selector lever cable from the transmission, release the selector lever cable -arrows 1- and then remove it from the cable bracket -arrow 2-.

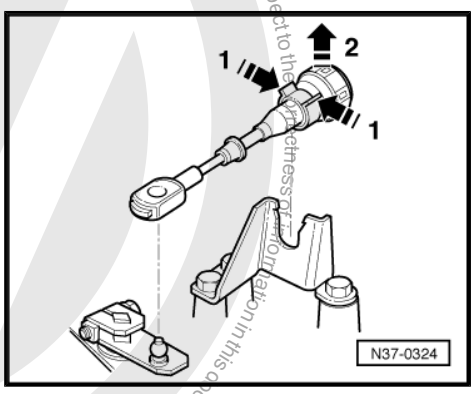

Note

♦ *Do not use pliers because the mounting tabs on the cable bracket could break off.*

♦ *Do not bend or kink the selector lever cable.*

– Pry the selector lever cable -1- off the selector shaft lever -3- using an open end wrench -2-.

– Disconnect the connector from the Multifunction Transmission Range Switch - F125- .

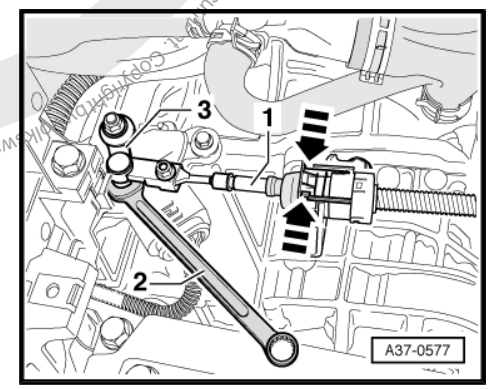

Protected by copyright. Copyright for private or commercial purposes, in part or in whole, is not permitted unless authorised by Volkswagen AG. Volkswagen AG does not guarantee or accept any liability with respect to the correctness of information in this document. Copyright by Volkswagen AG.

– Remove the nut -1-.
– Remove the spring washer -2- and the lever -3- from the selector shaft -4-.

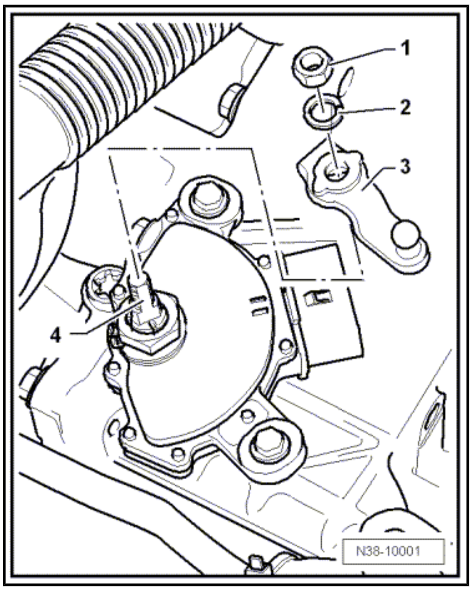

– Bend back the hooks on the lock washer -2- using a screwdriver.
– Replace the lock washer if a hook breaks off.
– Remove the nut -1-.
– Remove the bolts -5-.
– Remove the multifunction transmission range switch -4- and the washers -2 and 3- from the selector shaft -6-.

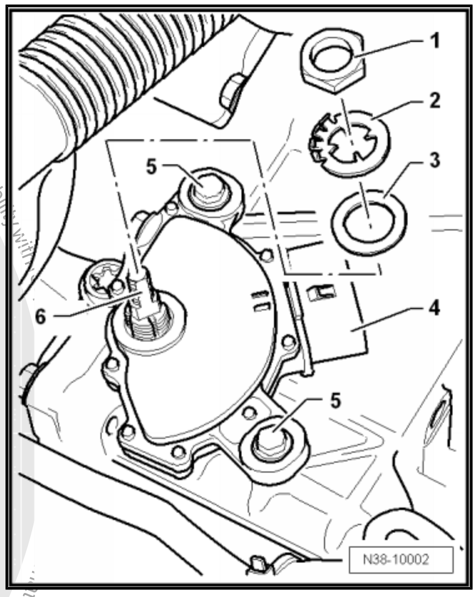

3.2 Multifunction Transmission Range Switch - F125- , Installing

Special tools and workshop equipment required

♦ Torque Wrench 1331 5-50Nm - VAG1331-

Install in reverse order of removal while. Note the following:

Protected by copyright. Copying for private or commercial purposes, in part or in whole, is not permitted unless authorised by Volkswagen AG. Volkswagen AG does not guarantee or accept any liability with respect to the correctness of information in this document. Copyright by Volkswagen AG.

Copyright by Volkswagen AG. Volkswagen AG does not guarantee or accept any liability with respect to the correctness and completeness of this document. Copying for private or commercial purposes, in part or in whole, is not permitted unless authorised by Volkswagen AG.

– Attach the multifunction transmission range switch -4- to the selector shaft -6-.
– Install the bolts -5- for the multifunction transmission range switch hand-tight.
– Bend back the hooks on the lock washer -2-.
– Install the washers -2 and 3- on the selector shaft -6-.
– Install the washer -2- with the hooks facing upward.
– Install the washer -2- with the long narrow guide into the long narrow recesses in the selector shaft -6-.
– Tighten the nut -1- to 7 Nm.
– Secure the nut -1- it by bending the hook on the lock washer -2- upward.
– Replace the lock washer if a hook breaks off.

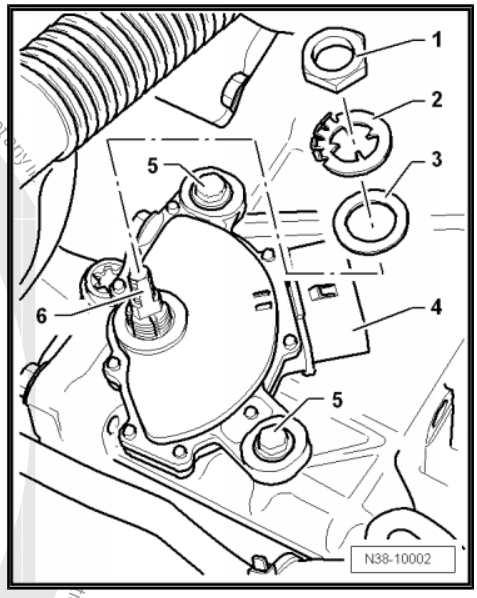

– Attach the lever -3- to the selector shaft -4-.
– Move the selector lever -3- into “P”. This means, push the selector lever -3- opposite the drive direction until it stops.
– Move the transmission into the “N” position with the lever -3-. Push the lever -3- two position forward in the direction of travel.
– Adjust the Multifunction Transmission Range Switch - F125- . Refer to
⇒ “3.3 Multifunction Transmission Range Switch F125 , Adjusting”, page 22 .
– Mount the spring washer -2- and the nut -1- on the selector shaft -4-.
– Tighten the nut -1- to 13 Nm.
– Check the selector mechanism. Refer to
⇒ “4.9 Selector Mechanism, Checking”, page 44 .
– If removed, install the air filer housing.
♦ Gasoline engine. Refer to ⇒ Rep. Gr. 24 ; Air Filter; Air Filter Housing, Removing and Installing .
♦ TDI engine. Refer to ⇒ Rep. Gr. 23 ; Diesel Direct Injection System; Overview - Air Filter .

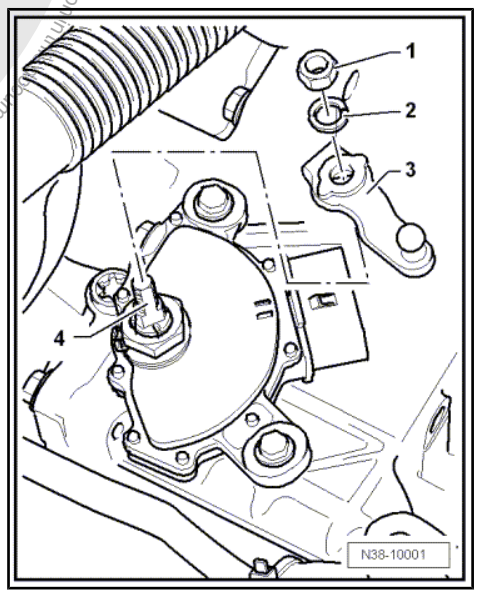

3.3 Multifunction Transmission Range Switch - F125- , Adjusting

Special tools and workshop equipment required

♦ Gauge - Multi Function Switch - T10173-
– Move the selector lever into “N”.
– Do not bend the selector lever cable.

Adjustment Requirements

- Selector lever cable is removed from the lever/selector shaft
- The selector shaft is in “N”.
- The bolts on the Multifunction Transmission Range Switch - F125- have been loosened.
- The lever/selector shaft is removed.

Adjusting

– Place the Gauge - Multi Function Switch - T10173- on the selector shaft -2- and turn the Multifunction Transmission Range Switch - F125- -1- until the Adjustment Gauge engages in the tab on the Multifunction Transmission Range Switch - F125- connector.

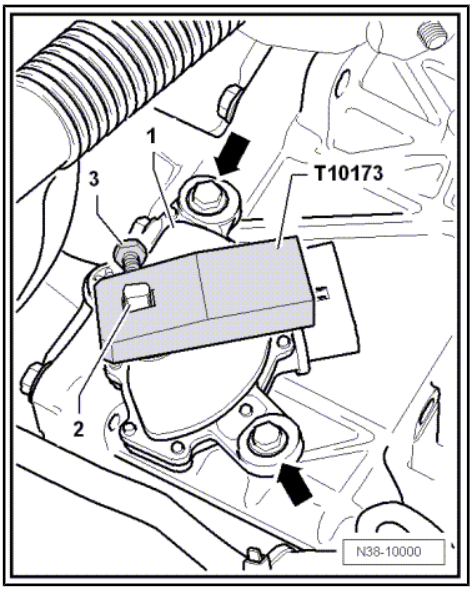

Note

If the tab on the connector does not lock into the groove in the Gauge - Multi Function Switch - T10173- , then the transmission is no longer in "N". In this case, shift the transmission into "N" using the Gauge - Multi Function Switch - T10173- .

– Secure the Gauge - Multi Function Switch - T10173- to the selector shaft -2- with the bolt -3-.

– Tighten the bolts -arrows- to 6 Nm.

– Remove the Gauge - Multi Function Switch - T10173- .

– Further installation is performed in reverse order of removal. Refer to
⇒ "3.2 Multifunction Transmission Range Switch F125 , Installing", page 21 .

Protected by copyright. Copying for private or commercial purposes, in part or in whole, is not permitted unless authorised by Volkswagen AG. Volkswagen AG does not guarantee or accept any liability with respect to the correctness of information in this document. Copyright by Volkswagen AG.

4 Selector Mechanism through 02/2009

⇒ “4.1 Overview - Selector Mechanism through 02/2009”, page 24

⇒ “4.2 Shift Mechanism with Selector Lever, Removing and Installing, through 02/2009”, page 26

⇒ “4.3 Selector Lever Cable, Removing and Installing, through 02/2009”, page 28

⇒ “4.4 Selector Lever Cable, Checking”, page 37

⇒ “4.5 Selector Lever Cable, Adjusting”, page 38

⇒ “4.6 Selector Lever, Emergency Release”, page 39

⇒ “4.7 Selector Lever Handle, Removing and Installing”, page 40

⇒ “4.8 Button in Handle, Moving into Installation Position”, page 42

⇒ “4.9 Selector Mechanism, Checking”, page 44

WARNING

Move the selector lever into “P” and set the parking brake before working with the engine running.

Selector mechanism from 03/2009. Refer to
⇒ “5 Selector Mechanism from 03/2009”, page 46 .

4.1 Overview - Selector Mechanism through 02/2009

Protected by copyright. Copying for private or commercial purposes, in part or in whole, is not permitted unless authorised by Volkswagen AG. Volkswagen AG does not guarantee or accept any liability with respect to the correctness of information in this document. Copyright by Volkswagen AG.

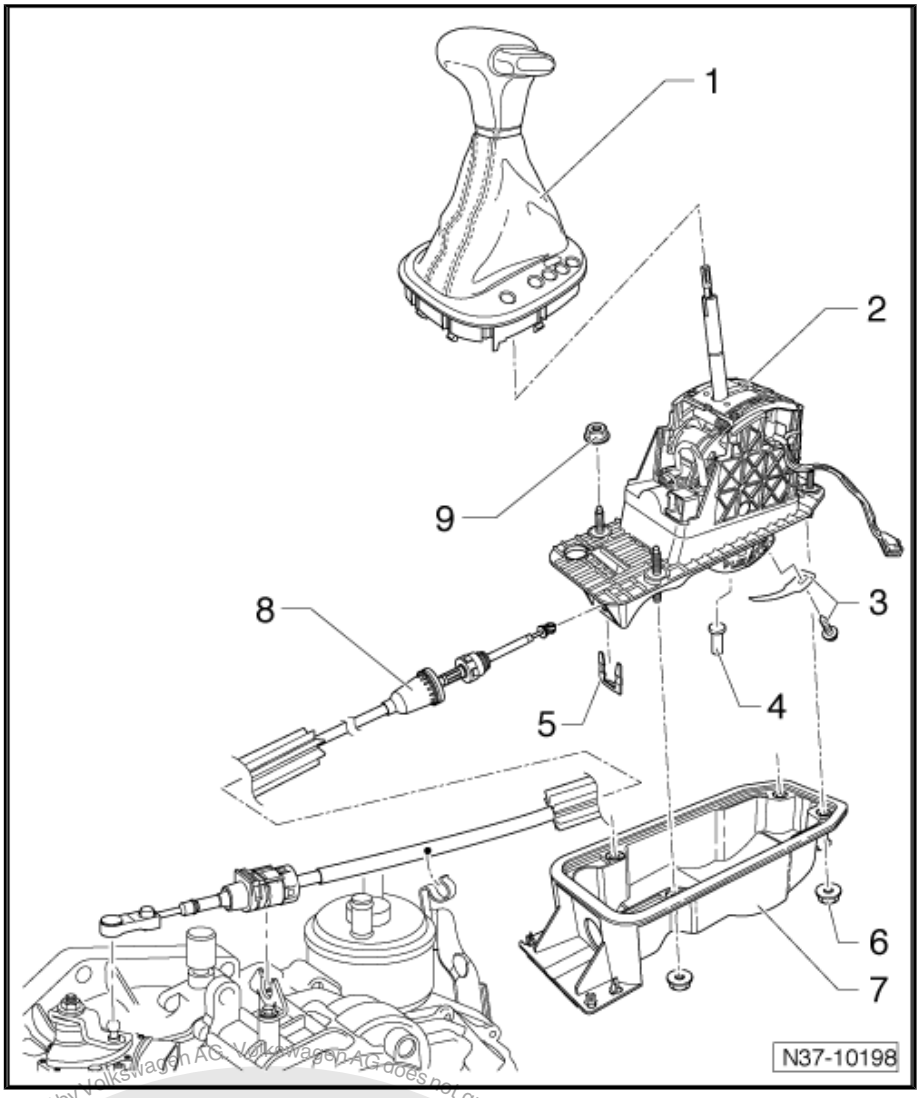

1 - Shift Cover with Handle

- ❑ Do not remove the handle unnecessarily. Only the cover must be unclipped for the emergency release. Refer to ⇒ “4.6 Selector Lever, Emergency Release”, page 39 .
- ❑ Pull the button past its pressure point before removing the handle. Secure the button with a cable tie or some suitable wire. This prevents the button from being pushed back into knob accidentally.
- ❑ If the button is pushed in with the handle removed:
  - Installing, pull out button beyond the noticeable press point.

2 - Selector Mechanism with Selector Lever

- ❑ Removing and installing. Refer to ⇒ “4.2 Shift Mechanism with Selector Lever, Removing and Installing, through 02/2009”, page 26 .

3 - Bolt with Spring

- ❑ 3 Nm

4 - Pin

- ❑ Removing. Refer to ⇒ “4.3 Selector Lever Cable, Removing and Installing, through 02/2009”, page 28 .
- ❑ Do not lubricate

5 - Locking Plate

- ❑ Always replace after removing

6 - Nut

- ❑ 9 Nm
- ❑ Quantity: 4

7 - Gearshift Housing

- ❑ With seal

8 - Selector Lever Cable

- ❑ Do not grease the cable.
- ❑ Removing and installing. Refer to ⇒ “4.3 Selector Lever Cable, Removing and Installing, through 02/2009”, page 28 .
- ❑ Checking. Refer to ⇒ “4.4 Selector Lever Cable, Checking”, page 37 .
- ❑ Adjusting. Refer to ⇒ “4.5 Selector Lever Cable, Adjusting”, page 38 .

9 - Hex Nut and Washer

- ❑ 8 Nm
- ❑ Quantity: 4

Protected by copyright. Copying for private or commercial purposes, in part or in whole, is not permitted unless authorised by Volkswagen AG. Volkswagen AG does not guarantee or accept any liability with respect to the correctness of information in this document. Copyright by Volkswagen AG.

4.2 Shift Mechanism with Selector Lever, Removing and Installing, through 02/2009

Note

After installation, the selector lever cable must be checked for ease of movement and adjusted.

Removing

– Remove the selector lever handle. Refer to ⇒ "4.7 Selector Lever Handle, Removing and Installing", page 40 .

– Remove the center console. Refer to ⇒ Body Interior; Rep. Gr. 68 ; Center Console .

– If necessary remove the air filter housing:

♦ Gasoline engine. Refer to ⇒ Rep. Gr. 24 ; Air Filter; Air Filter Housing, Removing and Installing .

♦ TDI engine. Refer to ⇒ Rep. Gr. 23 ; Diesel Direct Injection System; Overview - Air Filter .

– Remove the selector lever cable from the transmission. Refer to ⇒ "4.3 Selector Lever Cable, Removing and Installing, through 02/2009", page 28 .

– Raise the vehicle.

To remove the selector level cable or the selector mechanism, the heat shield under the selector mechanism must be removed as follows:

Caution

Risk of damaging the decoupling element.

- ***Do not bend the decoupling element more than 10°.***
- ***Do not load the decoupling element.***
- ***Do not damage the wire mesh on the decoupling element.***

– Loosen the nuts on the clamping sleeve -1- and then slide it toward the rear.

– Remove the front tunnel brace -arrows- from the underbody.

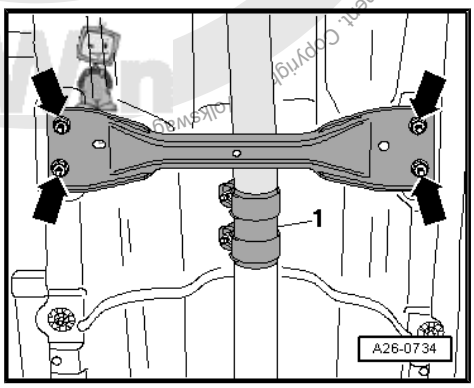

Protected by copyright. Copying for private or commercial purposes, in part or in whole, is not permitted unless authorised by Volkswagen AG. Volkswagen AG does not guarantee or accept any liability with respect to the correctness of information in this document. Copyright by Volkswagen AG.

– If necessary remove the exhaust system bracket from the subframe -arrows-.

– Tie up the front exhaust pipe.

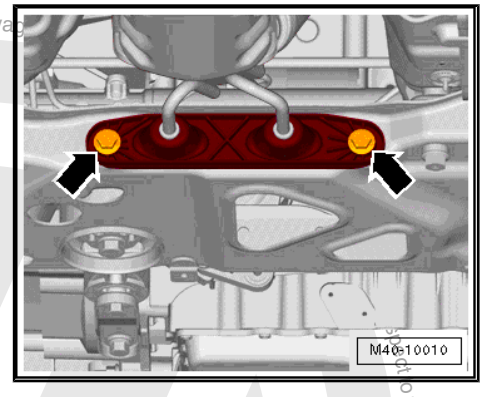

– If equipped, remove nuts -1 and 2-, and remove the rear tunnel brace.

– Disengage the center muffler and the rear muffler from the retaining loops -arrows- and tie them to the body for example with a wire. Remove the exhaust system rear section, if necessary.

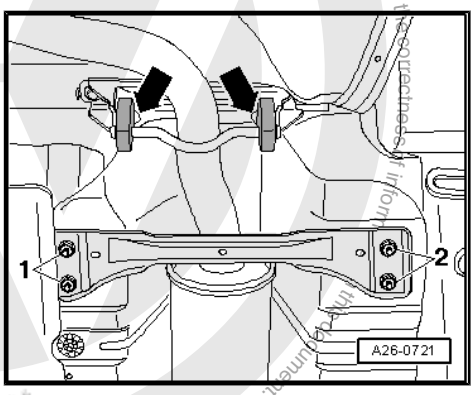

– Remove the underbody trim panel nuts -arrows-.

– Remove the lock washers -2 and 3-.

– Lower the underbody trim panel on the inside just enough until the heat shield -1- for the center tunnel can be removed.

– Remove the four nuts on the selector mechanism »from above«.

– Remove the selector mechanism from below, while doing so, do not bend or kink the selector level cable.

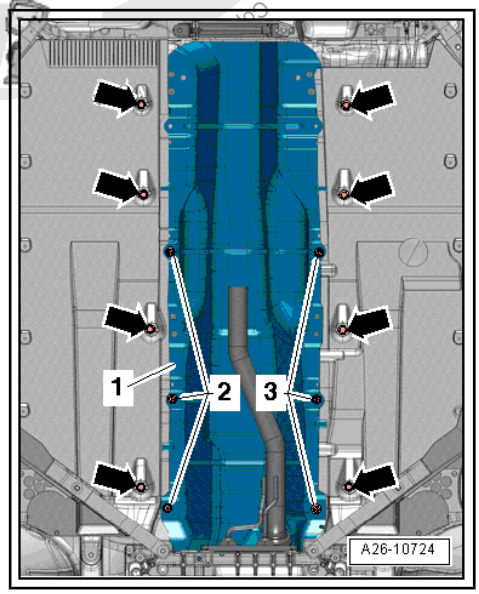

Installing

Install in reverse order of removal while. Note the following:

Tightening specifications for the nuts. Refer to
⇒ “4.1 Overview - Selector Mechanism through 02/2009”, page 24 .

– Insert the selector lever cable into the cable bracket/transmission and carefully push it onto the selector shaft lever. Do not bend the selector shaft lever when doing this, otherwise shifting can no longer be adjusted precisely.

– Do not bend or kink the selector lever cable.

– Engage the selector level cable -1- in the clip -arrow- on the transmission. When routing the selector lever cable to the ATF cooler, maintain a minimum 5 mm space.

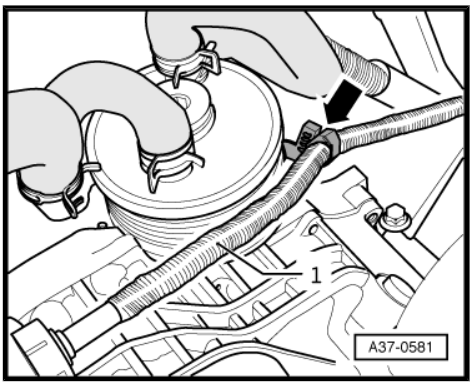

Protected by copyright. Copying for private or commercial purposes, in part or in whole, is not permitted unless authorised by Volkswagen AG. Volkswagen AG does not guarantee or accept any liability with respect to the correctness of information in this document. Copyright by Volkswagen AG.

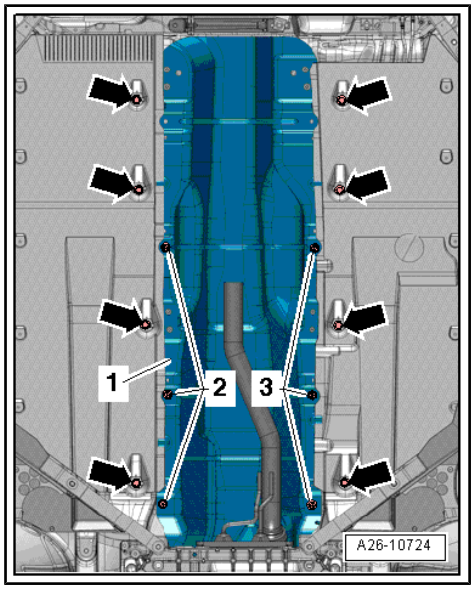

– Install the heat shield -1- under the selector mechanism and attach with the lock washers -2 and 3-.

– Attach the underbody trim panel to the body -arrows-. Refer to ⇒ Body Exterior; Rep. Gr. 50 ; Underbody Trim Panels .

– Install the exhaust system and align it without tension. Refer to ⇒ Rep. Gr. 26 ; Exhaust System; Exhaust System, Installing without Tension or ⇒ Rep. Gr. 26 ; Exhaust Pipes/ Mufflers; Exhaust System, Installing without Tension .

– Install the tunnel braces under the exhaust system. Refer to ⇒ Body Exterior; Rep. Gr. 50 ; Tunnel Brace .

– Install the center console. Refer to ⇒ Body Interior; Rep. Gr. 68 ; Center Console .

– Install the selector lever handle. Refer to ⇒ “4.7 Selector Lever Handle, Removing and Installing”, page 40 .

– Adjust the selector lever cable. Refer to ⇒ “4.5 Selector Lever Cable, Adjusting”, page 38 .

– Check the selector mechanism. Refer to ⇒ “4.9 Selector Mechanism, Checking”, page 44 .

– If removed, install the air filer housing.

♦ Gasoline engine. Refer to ⇒ Rep. Gr. 24 ; Air Filter; Air Filter Housing, Removing and Installing .

♦ TDI engine. Refer to ⇒ Rep. Gr. 23 ; Diesel Direct Injection System; Overview - Air Filter .

4.3 Selector Lever Cable, Removing and Installing, through 02/2009

Note

After installation, the selector lever cable must be checked for ease of movement and adjusted.

Removing

– Move the selector lever into “S”

– If necessary remove the air filter housing:

♦ Gasoline engine. Refer to ⇒ Rep. Gr. 24 ; Air Filter; Air Filter Housing, Removing and Installing .

♦ TDI engine. Refer to ⇒ Rep. Gr. 23 ; Diesel Direct Injection System; Overview - Air Filter .

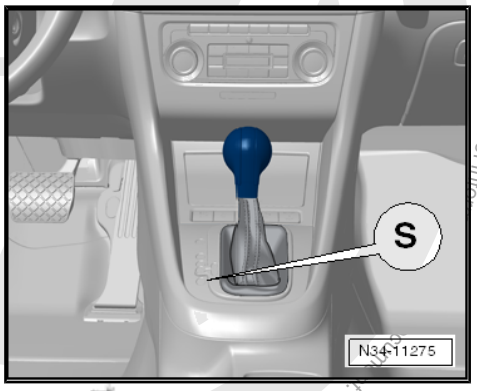

Protected by copyright. Copyright for private or commercial purposes, in part or in whole, is not permitted unless authorised by Volkswagen AG. Volkswagen AG does not guarantee or accept any liability with respect to the correctness of information. Copyright by Volkswagen AG.

– To remove the selector lever cable from the transmission, release the selector lever cable -arrows 1- and then remove it from the cable bracket -arrow 2-.

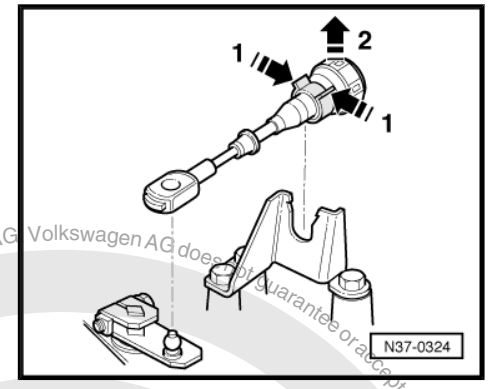

Note

- *Do not use pliers because the mounting tabs on the cable bracket could break off.*
- *Do not bend or kink the selector lever cable.*

– Pry the selector lever cable -1- off the lever -3- using an open end wrench -2-.

– Raise the vehicle.

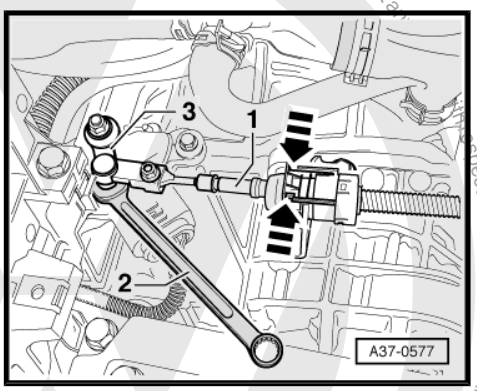

To remove the selector level cable or the selector mechanism, the heat shield under the selector mechanism must be removed as follows:

Caution

Risk of damaging the decoupling element.

- *Do not bend the decoupling element more than 10°.*
- *Do not load the decoupling element.*
- *Do not damage the wire mesh on the decoupling element.*

– Loosen the nuts on the clamping sleeve -1- and then slide it toward the rear.

– Remove the front tunnel brace -arrows- from the underbody.

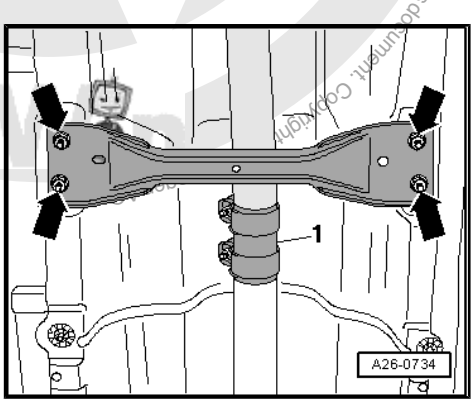

– If necessary remove the exhaust system bracket from the subframe -arrows-.

– Tie up the front exhaust pipe.

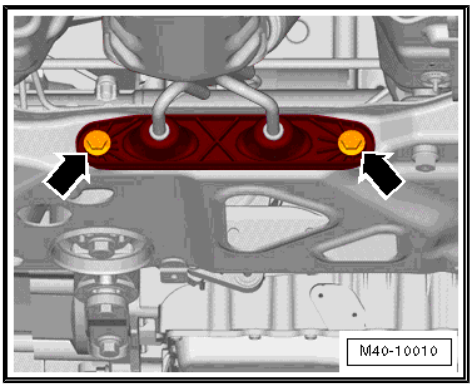

Protected by copyright. Copying for private or commercial purposes, in part or in whole, is not permitted unless authorised by Volkswagen AG. Volkswagen AG does not guarantee or accept any liability with respect to the correctness of information in this document. Copyright

– If equipped, remove nuts -1 and 2-, and remove the rear tunnel brace.

– Disengage the center muffler and the rear muffler from the retaining loops -arrows- and tie them to the body for example with a wire. Remove the exhaust system rear section, if necessary.

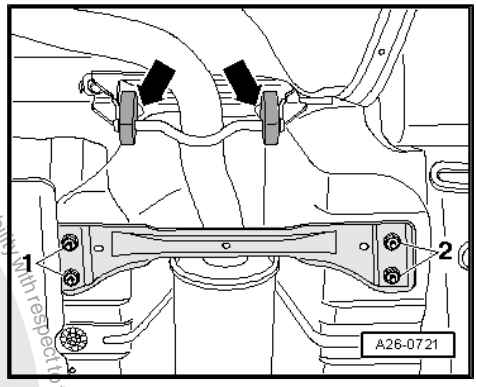

– Remove the underbody trim panel nuts -arrows-.

– Remove the lock washers -2 and 3-.

– Lower the underbody trim panel on the inside just enough until the heat shield -1- for the center tunnel can be removed.

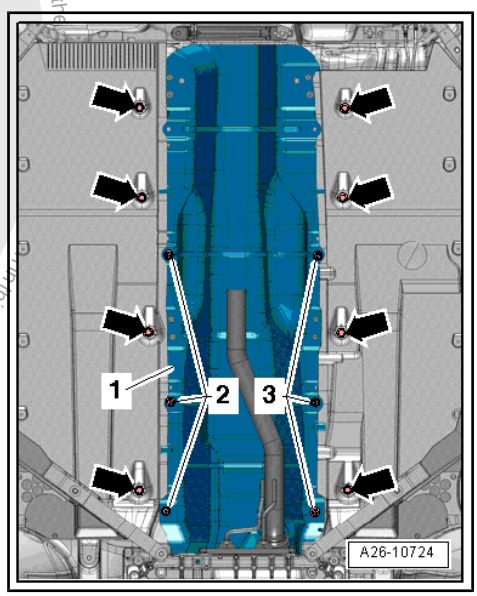

– Remove the -selector housing- from under the selector lever.

Protected by copyright. Copying for private or commercial purposes, in part or in whole, is not permitted unless authorised by Volkswagen AG. Volkswagen AG does not guarantee or accept any liability with respect to the correctness of this document. Copyright by Volkswagen AG.

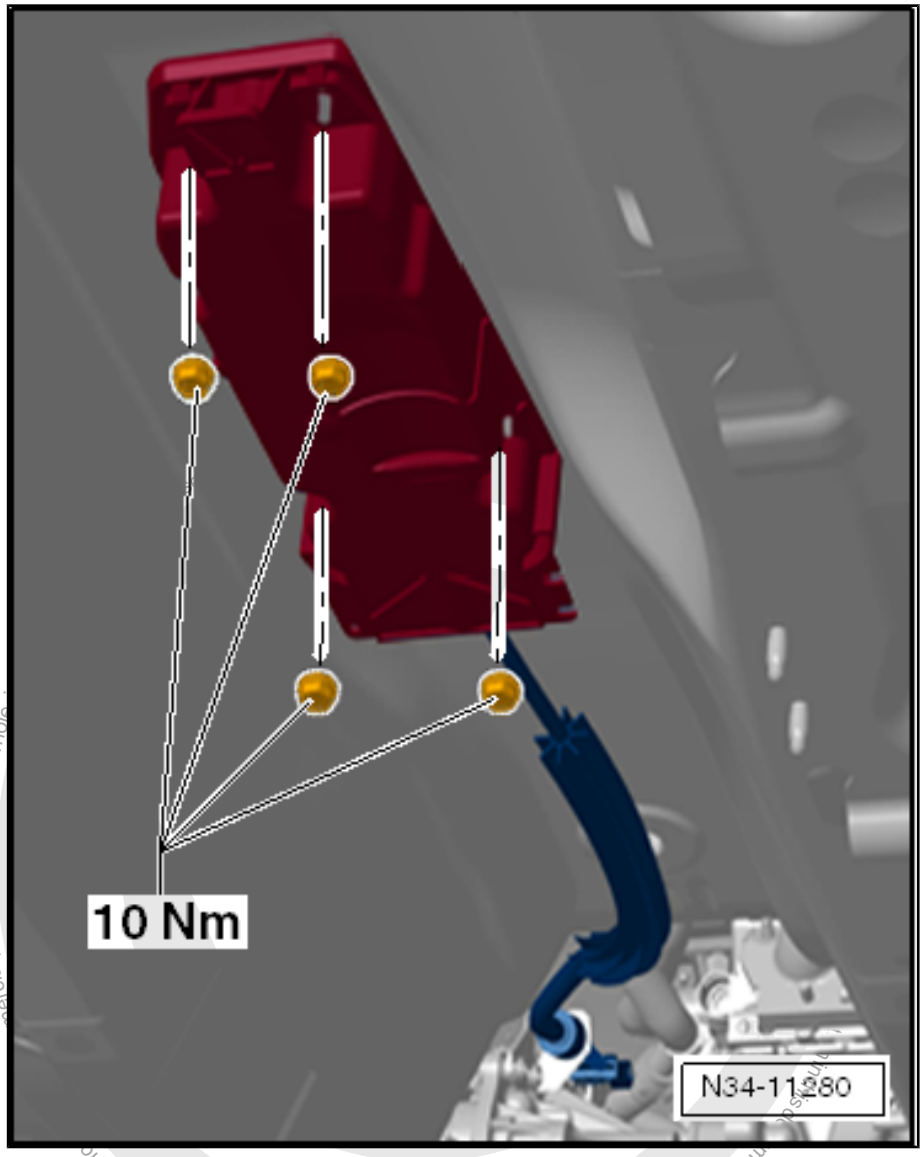

– Remove selector lever cable locking plate. Always replace the locking plate.

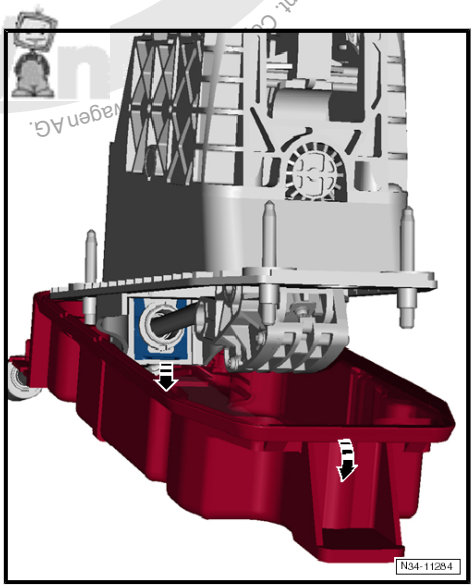

The -selector housing- is push slightly onto the selector lever cable in the direction of -arrow-.

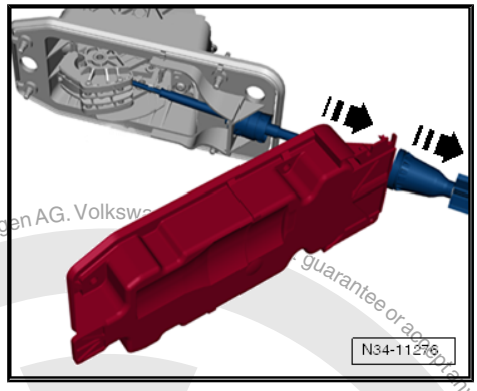

The locking strap must be pushed forward in order to remove the cable in direction of -arrow 1-.

– Push the -pin- upward in direction of -arrow 2-at the same time with a screwdriver .

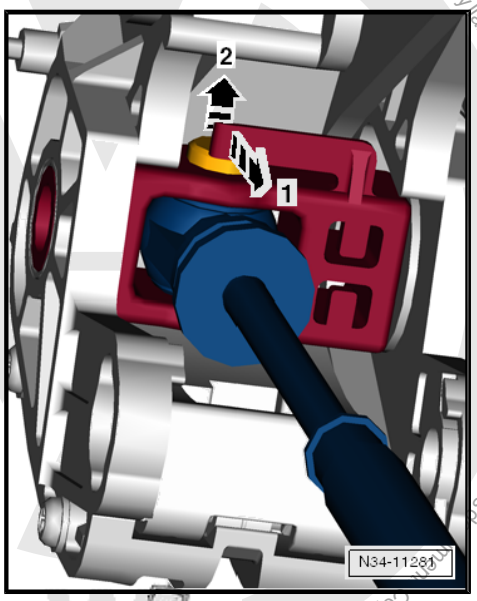

– Insert the -screwdriver- from underneath while pushing the securing tab forward.

Protected by copyright. Copying for private or commercial purposes, in part or in whole is not permitted unless authorised by Volkswagen AG. Volkswagen AG does not guarantee or accept any liability with respect to the correctness of information in this document. Copyright by Volkswagen AG.

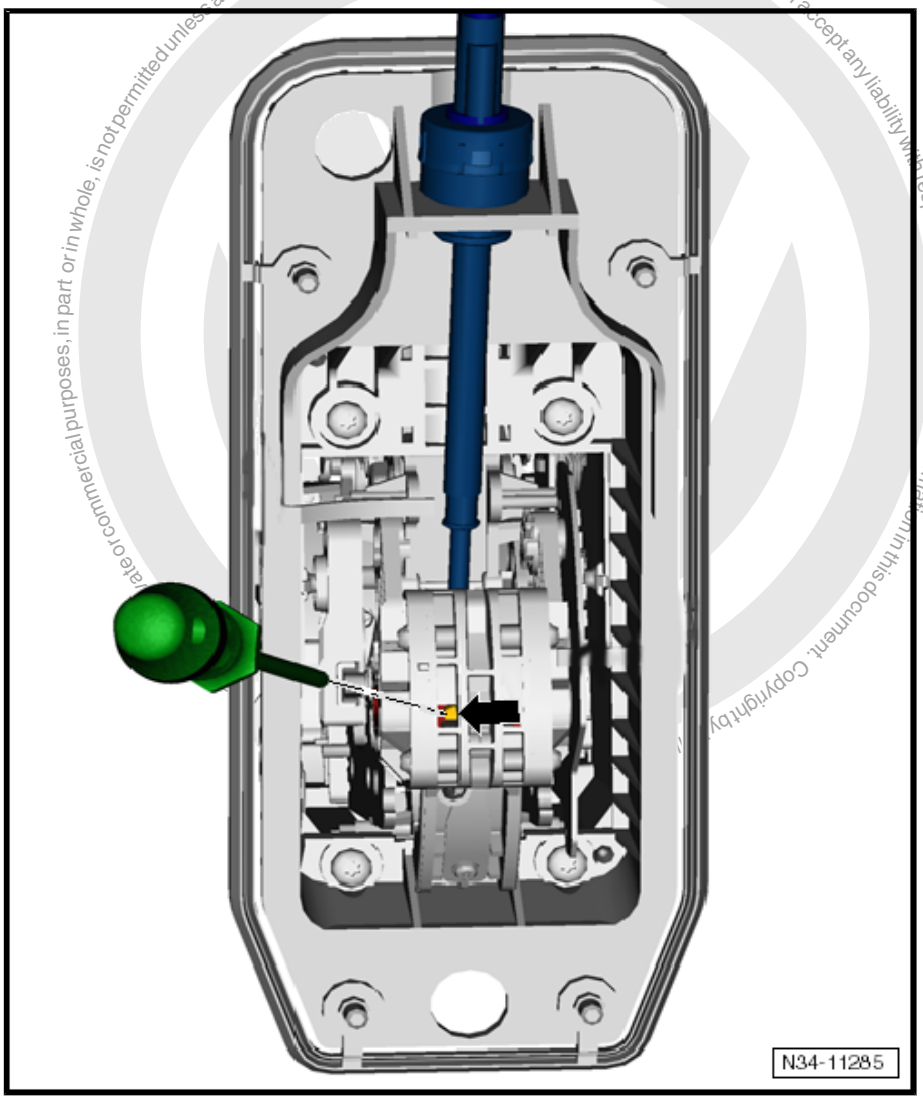

For Clarity

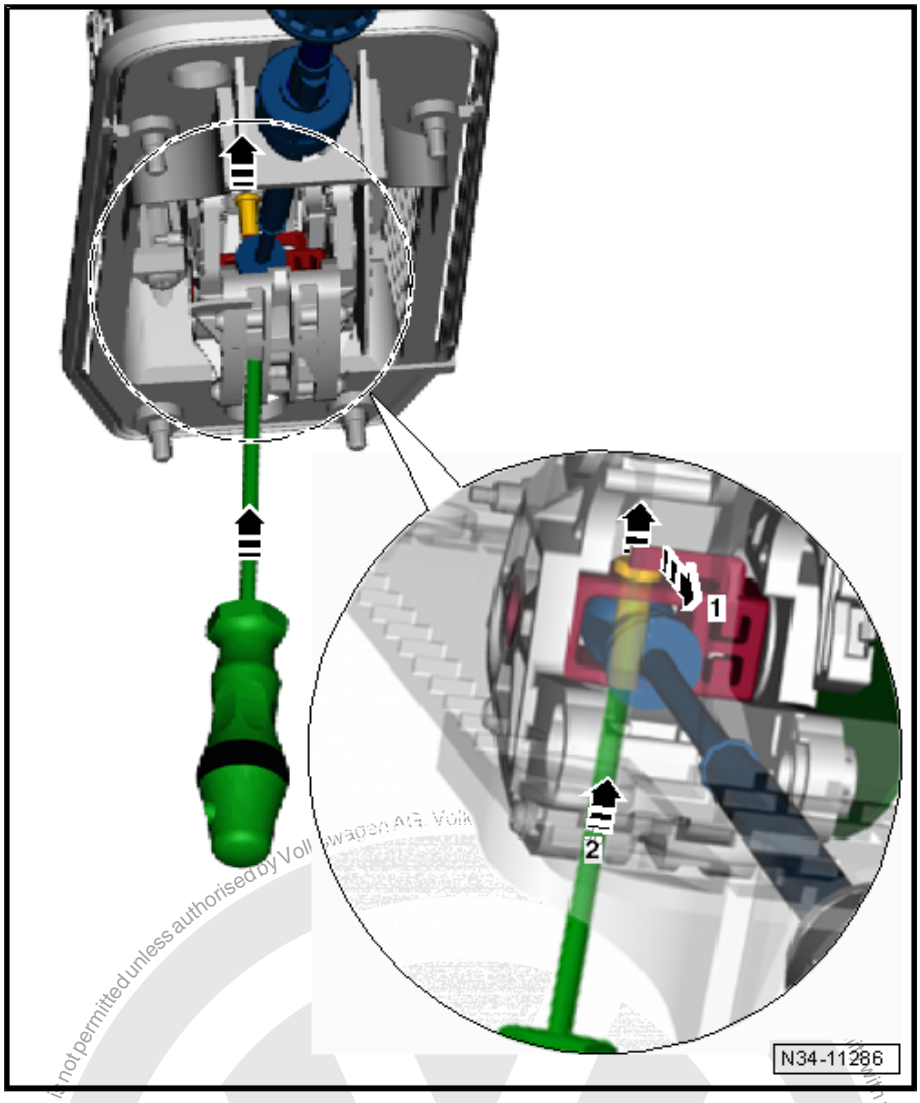

– Remove the selector lever cable.

Remove the selector housing from the selector lever cable.

Installing

Do not lubricate the selector lever cable.

– Route the selector lever cable without tension and place it in the cable bracket on the transmission. Do not secure it there.

– When installing, make sure the selector lever cable is routed correctly.

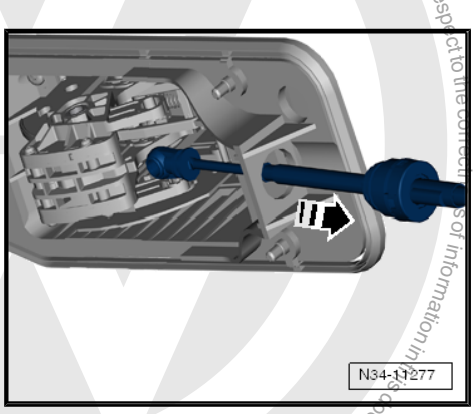

Protected by copyright. Copying for private or commercial purposes, in part or in whole, is not permitted unless authorised by Volkswagen AG. Volkswagen AG does not guarantee or accept any liability with respect to the correctness of information in this document. Copyright by Volkswagen AG.

– Clip the selector lever cable into the bracket. Make sure the bracket does not touch the ATF cooler.

Tighten the -nuts- to 8 Nm.

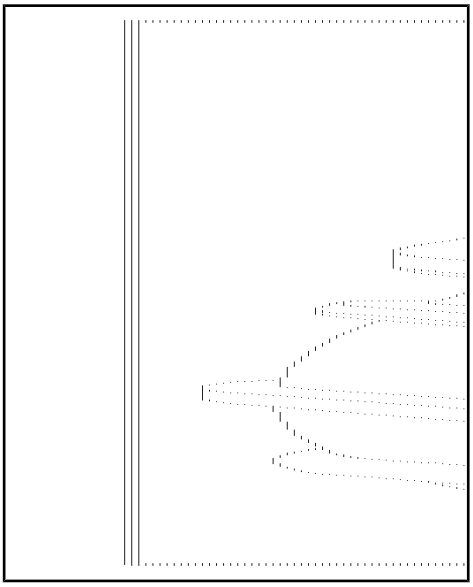

– Position the selector housing on the selector lever cable.

– Install the selector lever cable into the selector mechanism.

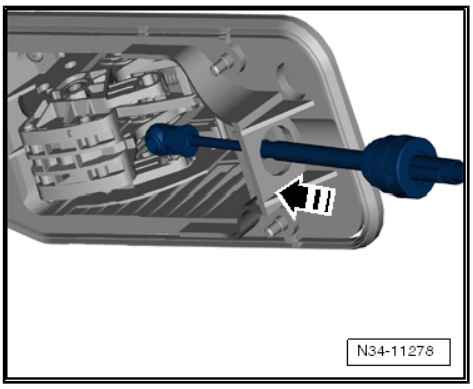

– Insert the selector lever cable into the bracket and then insert the bolt through the eye from the top in the direction of -arrow 2-.

Install the locking plate only after having checked the selector lever cable for ease of movement. Refer to
⇒ “4.4 Selector Lever Cable, Checking”, page 37 .

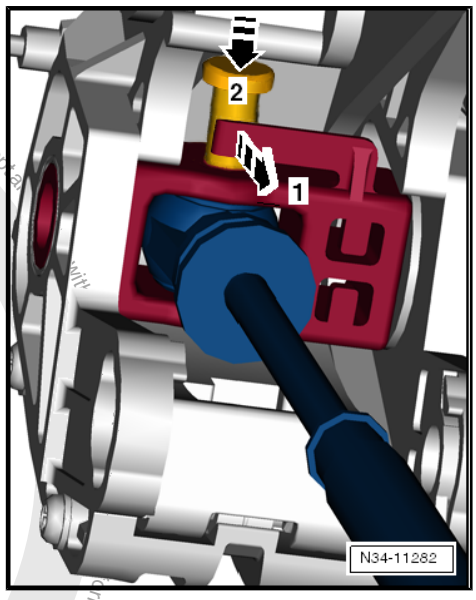

– Secure the selector lever cable with a new securing plate to the cable bracket on the selector mechanism.

Protected by copyright. Copying for private or commercial purposes, in part or in whole, is not permitted unless authorised by Volkswagen AG. Volkswagen AG does not guarantee or accept any guarantee or acceptance of information in this document. Copyright by Volkswagen AG.

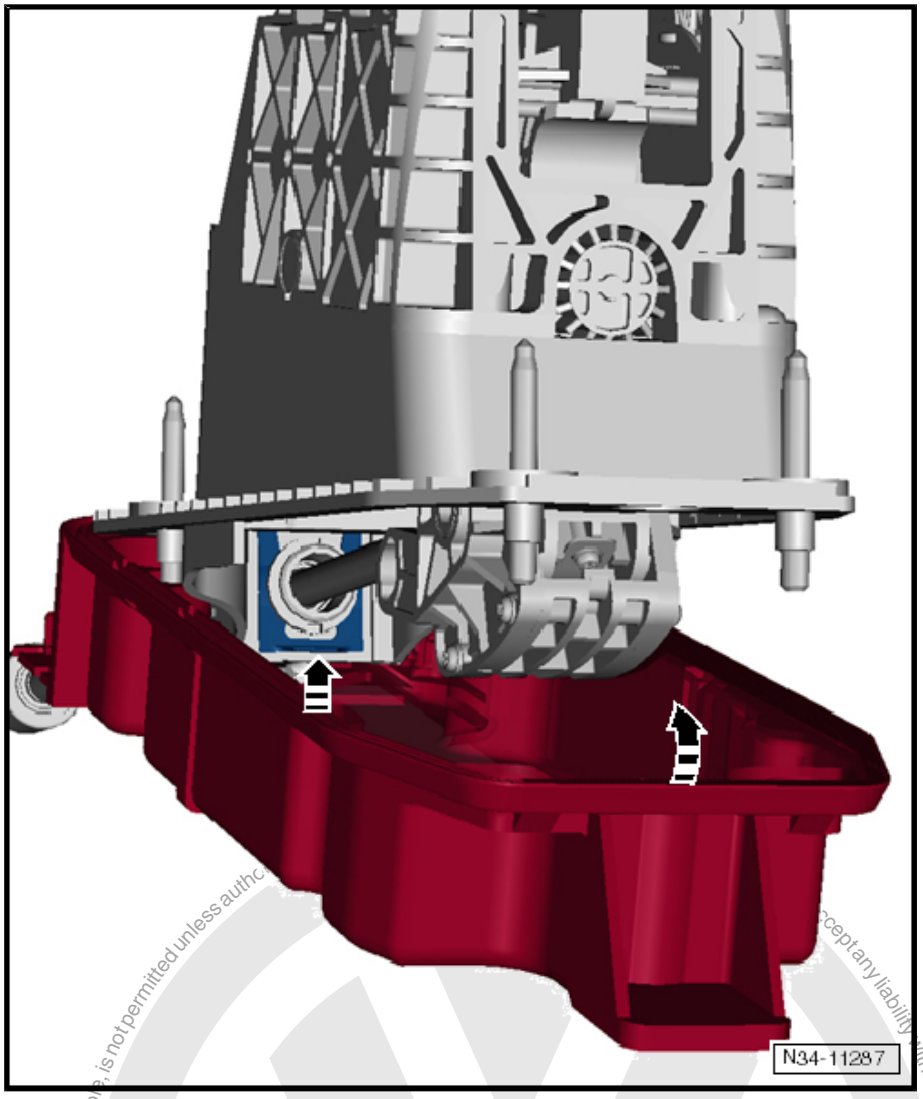

– Install the selector housing.

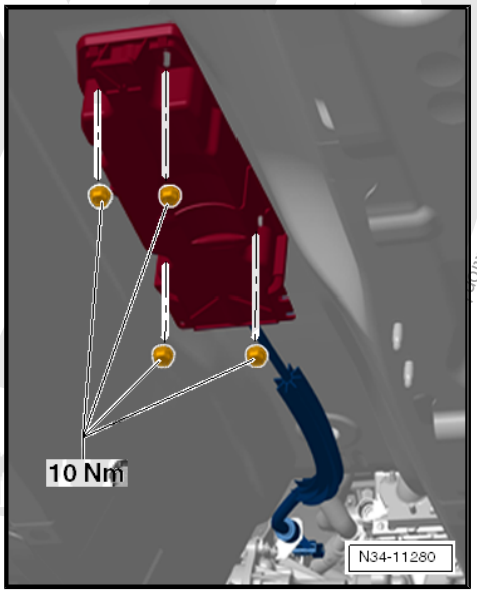

Protected by copyright. Copying for private or commercial purposes, in part or in whole, is not permitted unless authorised. We accept any liability with respect to the correctness of information.

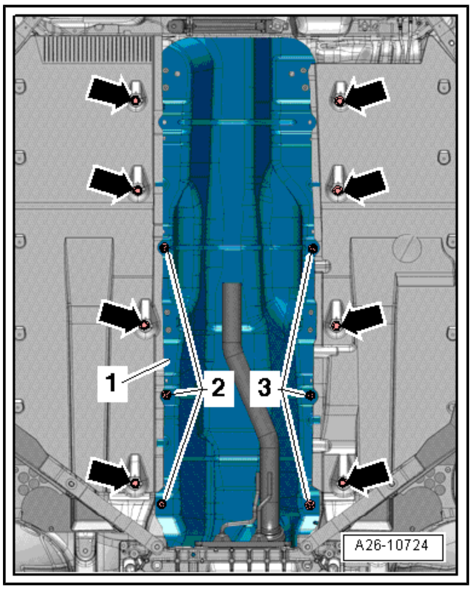

– Install the heat shield -1- under the selector mechanism and attach with the lock washers -2 and 3-.

– Attach the underbody trim panel to the body -arrows-.

– Install the exhaust system and align it without tension. Refer to ⇒ Rep. Gr. 26 ; Exhaust System; Exhaust System, Installing without Tension or ⇒ Rep. Gr. 26 ; Exhaust Pipes/ Mufflers; Exhaust System, Installing without Tension .

– Install the tunnel braces under the exhaust system. Refer to ⇒ Body Exterior; Rep. Gr. 50 ; Tunnel Brace .

– Adjust the selector lever cable after installing. Refer to ⇒ “4.5 Selector Lever Cable, Adjusting”, page 38 .

– If removed, install the air filer housing.

♦ Gasoline engine. Refer to ⇒ Rep. Gr. 24 ; Air Filter; Air Filter Housing, Removing and Installing .

♦ TDI engine. Refer to ⇒ Rep. Gr. 23 ; Diesel Direct Injection System; Overview - Air Filter .

4.4 Selector Lever Cable, Checking

Brief Description

To check the selector lever cable for ease of movement, remove it from the transmission and position the removed end so it does not make contact anywhere.

Then selector lever is moved and the selector lever cable installed again on the transmission.

After that, the selector lever cable must be adjusted. Refer to ⇒ “4.5 Selector Lever Cable, Adjusting”, page 38 .

Do not grease the selector lever cable connection!

Checking

– Move the selector lever into »P«.

– Loosen the bolt -2- on the selector lever cable -1-.

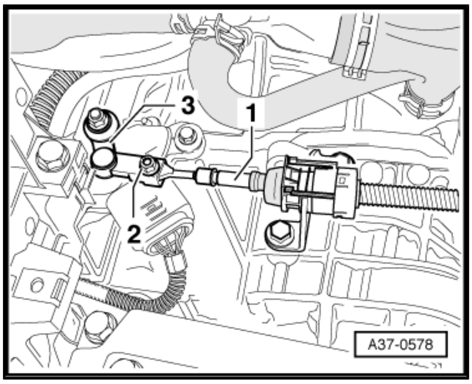

Protected by copyright. Copying for private or commercial purposes, in part or in whole, is not permitted unless authorised by Volkswagen AG. Volkswagen AG does not guarantee or accept any liability with respect to the correctness of information in this document. Copyright by Volkswagen AG.

– Pry the selector lever cable -1- off the selector shaft lever -3- using an open end wrench -2-.

– Squeeze the retainers and remove the selector lever cable from the cable bracket -arrows-.

– Move the selector lever from »P« to »S« and back to »P« several times.

• The selector lever must have ease of movement.

– Reinstall the selector level cable with the »loosened« adjusting screw.

– Adjust the selector lever cable. Refer to ⇒ “4.5 Selector Lever Cable, Adjusting”, page 38 .

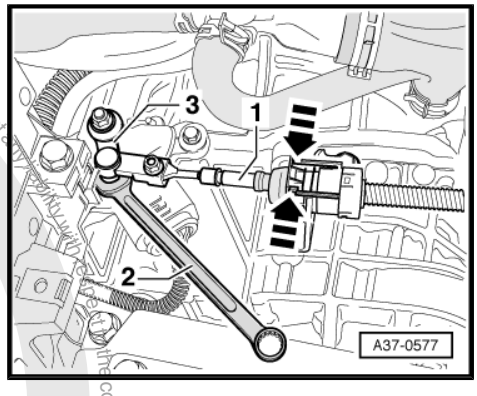

4.5 Selector Lever Cable, Adjusting

Special tools and workshop equipment required

♦ Torque Wrench 1331 5-50Nm - VAG1331-

• Selector mechanism and selector lever cable move easily when shifting.

• Selector lever cable boot is undamaged.

Selector Lever Cable Must Always Be Adjusted If:

♦ The selector lever cable was removed from the transmission.

♦ The engine and/or transmission were removed and installed.

♦ Sections of the subframe mount were removed and installed.

♦ The selector lever cable itself or the selector mechanism was removed and installed.

♦ The engine/transmission position was changed, for example, were installed without tension.

Adjusting

– Move the selector lever into “P” position.

• The adjusting screw -2- must be »loosened«.

– Move the lever/selector shaft -3- into “P” (push the lever to the rear).

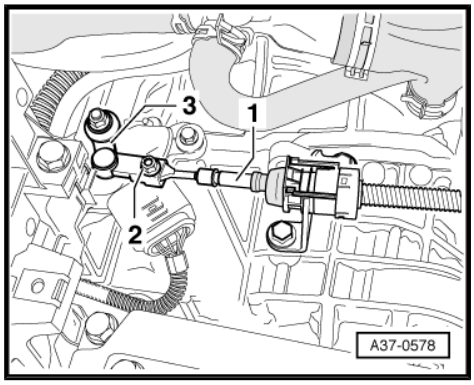

> ⚠ **WARNING**
>
> ***Make sure the parking lock is latched.***

– From »underneath the vehicle«, rotate both front wheels in the same direction and at the same time until the parking lock audibly engages.

• The parking lock is engaged when it is not possible to rotate both front wheels in the same direction at the same time.

– Tap the handle on the selector lever back and forth gently but do not move it out of “P” under any circumstances.

This places the selector lever cable core in its optimal position.

– Tighten the bolt -2- to 13 Nm.

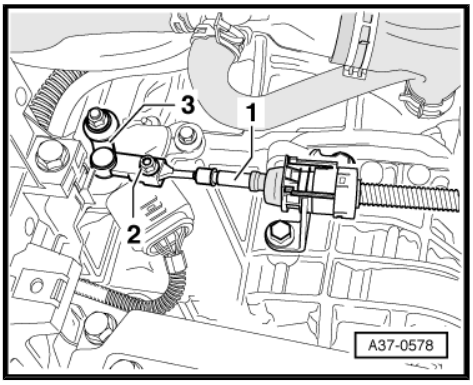

4.6 Selector Lever, Emergency Release

Do Not Remove the Handle

– Unclip the shift cover and hold it to the side.

– Press the brake or set the parking brake.

Vehicles through 02/2009

– Press on the yellow plastic piece from the right to the left -arrow-.

The lever can now be moved out of »P«.

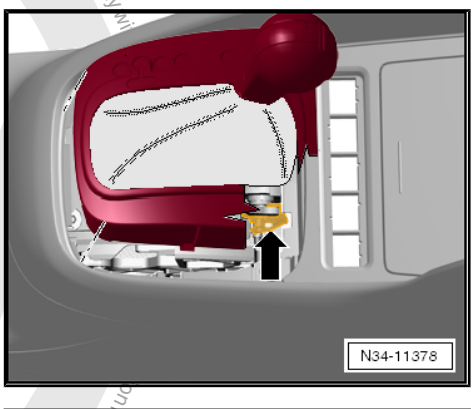

Vehicles from 03/2009

– Push on the yellow plastic part.

The lever can now be moved out of »P«.

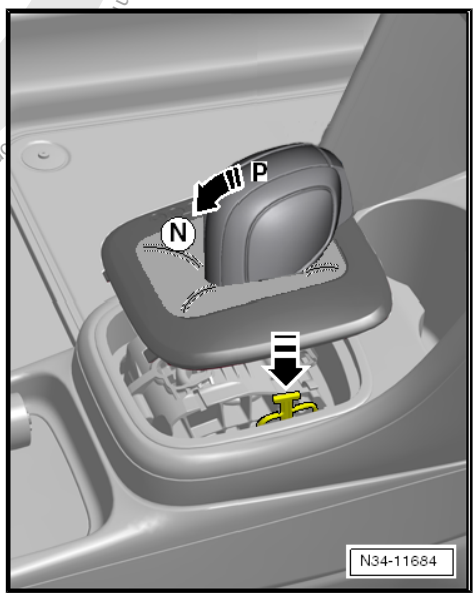

Protected by copyright. Copying for private or commercial purposes, in part or in whole, is not permitted unless authorised by Volkswagen AG. Volkswagen AG does not guarantee or accept any liability wi
Copyright by Volkswagen AG.

4.7 Selector Lever Handle, Removing and Installing

Note

- *There are different handles depending on the model.*
- *The handle is removed together with the shift cover.*
- *It is possible that the button could be pressed into the handle. Never install the handle when the button is pressed in.*

Removing

– Move the selector lever into “D” position.

Handle with the Button on the Side

– Pull the button out of the handle just far enough until there is a small gap between the handle and the button. The button locks when released.

– Secure the button in this position with a cable tie or wire to prevent the button from being pressed in.

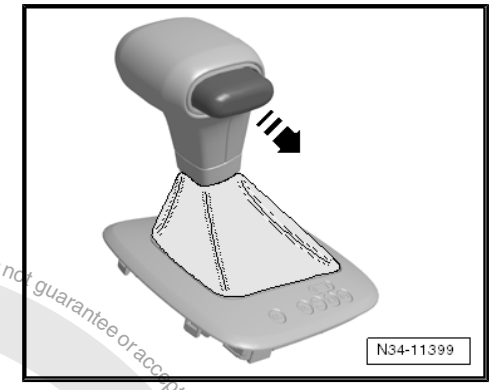

Handle with Front Button

It is not necessary to pull out the button by hand. The button locks in the installation position -arrow- when the handle is removed.

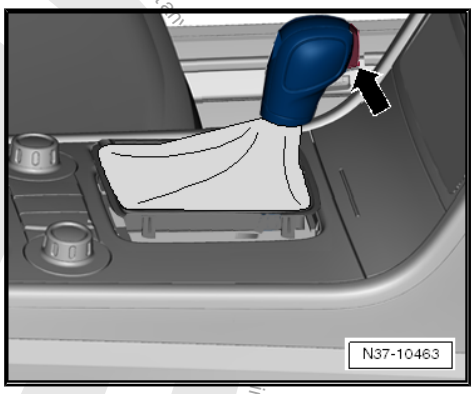

Handle with Sleeve

– Unclip the cover.

– Disconnect the connector from the shift cover.

– Push the sleeve upward in the direction of -arrow- to unlock the handle.

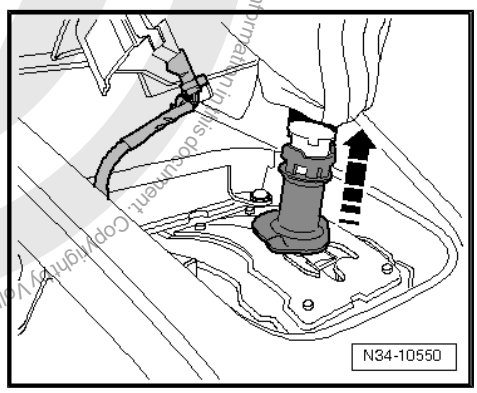

Protected by copyright. Copying for private or commercial purposes, in part or in whole, is not permitted unless authorised by Volkswagen AG. Volkswagen AG does not guarantee or accept any liability with respect to the correctness of information in this document. Copyright by Volkswagen AG.

Handle with Clamp

– Cut the clamp under the boot -arrow- with a side cutter.

Continuation for All Handles

– Remove the handle from the selector lever without pushing the button.

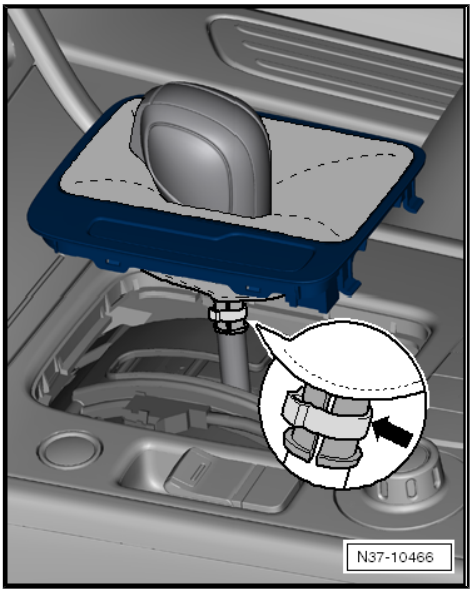

Note

Do not push the button after removal or it will not be possible to install the handle again.

Installing

– Install in reverse order of removal while. Note the following:

• The selector lever is in the “D” position.

Handle with the Button on the Side

• The button inside the handle is pulled out and if necessary is protected from getting pushed in again.

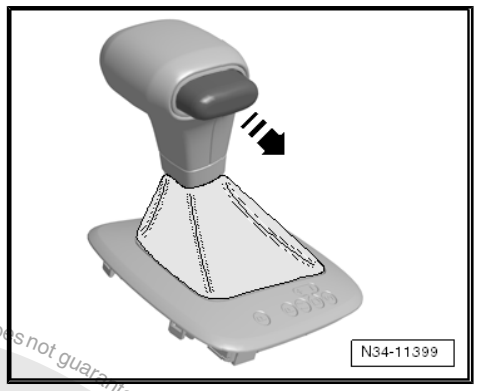

Handle with Front Button

• The button is in the installation position -arrow-.

If the button was pushed in by mistake, the installed position can be set again.

– Move the button into the installation position. Refer to ⇒ “4.8 Button in Handle, Moving into Installation Position”, page 42 .

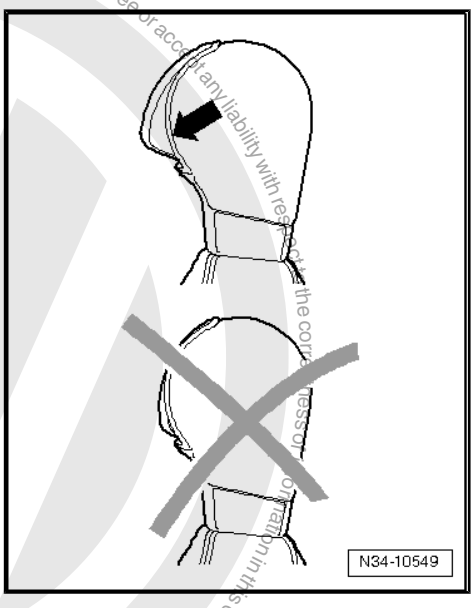

Protected by copyright. Copying for private or commercial purposes, in part or in whole, is not permitted unless authorised by Volkswagen AG. Volkswagen AG does not guarantee or accept any liability with respect to the correctness of information in this document. Copyright by Volkswagen AG.

Note

A new handle is delivered with an assembly fastener. Remove the retainer just before installing.

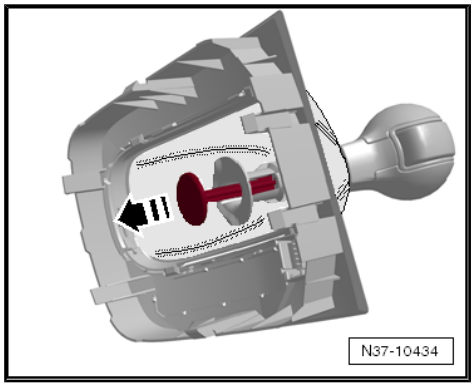

Handle with Sleeve

- Install the handle all the way onto the selector lever and lock it.
- Push the sleeve downward to lock it.

Only Handles with Clamps

- Install the handle all the way with a new clamp.
- Clamp off the clamps using Hose Clamp Pliers - VAG1275- .
- Press the button after installation.

Note

If the button stays in the handle after being pressed, this means it was installed incorrectly. If this happens, remove the handle again and move the button in the installation position again. Refer to
⇒ "4.8 Button in Handle, Moving into Installation Position", page 42 *. Then install the handle again.*

Further installation is performed in the reverse order of the removal.

4.8 Button in Handle, Moving into Installation Position

⇒ "4.8.1 Handle with Side Button", page 42

⇒ "4.8.2 Handle with Front Button", page 42

4.8.1 Handle with Side Button

- Pull the button out of the handle just far enough until there is a small gap between the handle and the button. The button locks when released.
- Secure the button in this position with a cable tie or wire to prevent the button from being pressed in.

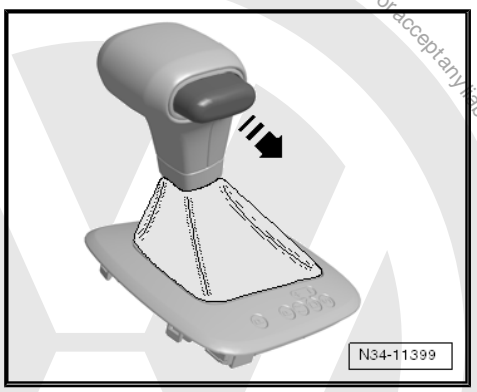

4.8.2 Handle with Front Button

The button cannot be pulled out on these handles.

There are two ways to move the button into the installation position, »with« or »without« the assembly fastener. Both possibilities are described here.

Protected by copyright. Copying for private or commercial purposes, in part or in whole, is not permitted unless authorised by Volkswagen AG. Volkswagen AG does not guarantee or accept any liability with respect to the correctness of information in this document. Copyright by Volkswagen AG.

Move the Handle »with« an Assembly Fastener into the Installation Position:

When using an assembly fastener, make sure that it has an eye -arrow- at the front. Other assembly fasteners are not suitable.

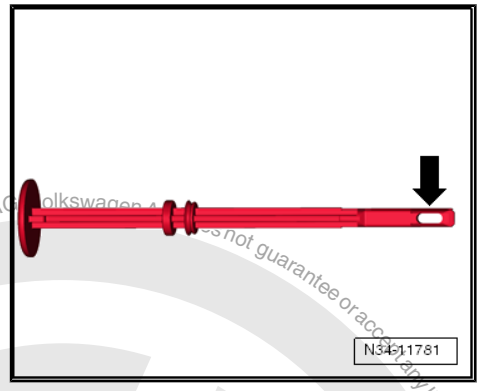

– With the button pressed and push the assembly fastener (with the eye) -arrow- all the way in until it latches into the assembly fastener. Then release the button. The button locks into the installation position when the assembly fastener is pulled out.

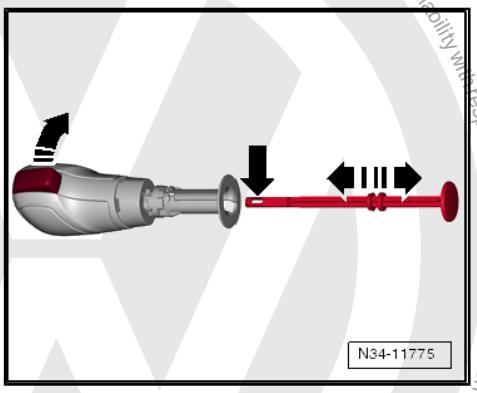

Moving the Handle »without« an Assembly Fastener into the Installation Position:

– Carefully unclip the handle trim -A- upward.

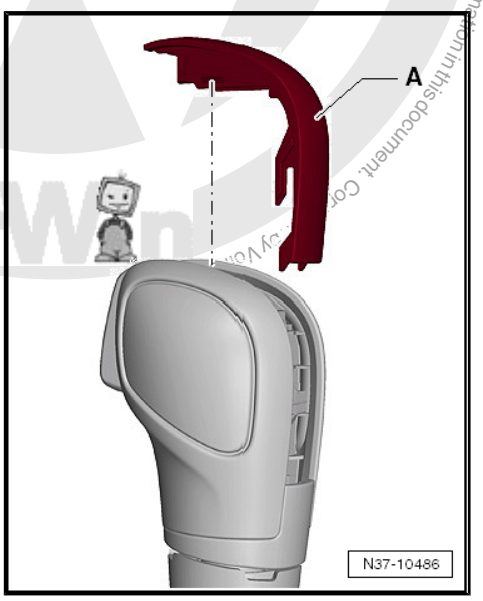

Protected by copyright. Copying for private or commercial purposes, in part or in whole, is not permitted unless authorised by Volkswagen AG. Volkswagen AG does not guarantee or accept any liability with respect to the correctness of information in this document.

– Push the small lever -1- for the pull rod into the groove -2- with a screwdriver. This pushes the button -3- into the installation position.

-I- the button is in the pressed position

-II- the button is in the installation position

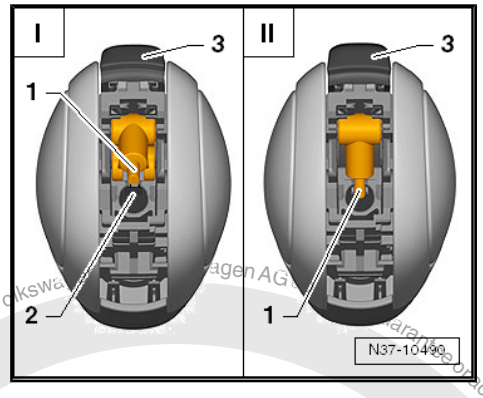

Note

- *Push the lever into the groove and no farther.*
- *Clip the handle trim back onto the selector mechanism only after the handle is installed. This way it is possible to see if the small lever engages into the pull rod when the button is pushed.*

4.9 Selector Mechanism, Checking

⇒ “4.9.1 Selector Lever in P and Ignition Switched On”, page 44

⇒ “4.9.2 Selector Lever in N and Ignition Switched On”, page 44

⇒ “4.9.3 Selector Level in Tiptronic Position”, page 45

⇒ “4.9.4 Ignition and Lights Switched On”, page 45

⇒ “4.9.5 Transmission Range Display”, page 45

Starter must not be able to be operated in selector lever positions “R”, “D”, “S” and in tiptronic position.

Over 5 km/h (3.1 mph)

The shift lock solenoid must not block the selector lever when the lever is in “N” position. The selector lever can be moved back into a another driving mode.

Below 5 km/h (3.1 mph)

In the selector lever is moved into the “N” position the shift lock solenoid can block the selector lever after approximately one second. The selector lever can only be moved out of “N” when the brake pedal is pressed.

4.9.1 Selector Lever in “P” and Ignition Switched On

- If the brake pedal is not depressed:

The selector lever is locked and cannot be moved out of “P” when the button is pressed. The shift lock solenoid blocks the selector lever.

- If the brake pedal is depressed:

The shift lock solenoid releases the selector lever. It is possible to select a gear. Move the selector lever slowly from “P” through “S”; while doing this, check whether the selector lever position displayed in instrument cluster matches actual selector lever position.

4.9.2 Selector Lever in “N” and Ignition Switched On

- If the brake pedal is not depressed:

Protected by copyright. Copyright by Volkswagen AG.

The selector lever is locked and cannot be moved out of “N” when the button is pressed. The shift lock solenoid blocks the selector lever.

- If the brake pedal is depressed:

The shift lock solenoid releases the selector lever. It is possible to select a gear.

4.9.3 Selector Level in “Tiptronic” Position

- Move the selector lever into the tiptronic gate:

The “D” symbol illumination must go out in the selector mechanism cover and the “+” and “-” symbols must turn on.

The selector lever position display in the instrument cluster must change from “P R N D S” to “6 5 4 3 2 1” when the selector lever is moved into the tiptronic gate.

4.9.4 Ignition and Lights Switched On

The respective symbol is being lit up in the selector mechanism cover.

4.9.5 Transmission Range Display

Simultaneous lighting of all segments on the transmission range display indicates the transmission is in emergency mode.

Protected by copyright. Copying for private or commercial purposes, in part or in whole, is not permitted unless authorised by Volkswagen AG. Volkswagen AG does not guarantee or accept any liability with respect to the correctness of information in this document. Copyright by Volkswagen AG.

Protected copyright. Copying for private or commercial purposes, in part or in whole, is not permitted unless authorised by Volkswagen AG. Volkswagen AG does not guarantee or accept any liability with respect to the correctness of information in this document. Copyright by Volkswagen AG.

5 Selector Mechanism from 03/2009

⇒ "5.1 Overview - Selector Mechanism from 03/2009", page 46

⇒ "5.2 Selector Mechanism, Removing and Installing, Vehicles from 03/2009", page 47

> ⚠ **WARNING**
>
> *Move the selector lever into "P" and set the parking brake before working with the engine running.*

Gearshift mechanism, vehicles through 02/2009. Refer to ⇒ "4 Selector Mechanism through 02/2009", page 24 .

5.1 Overview - Selector Mechanism from 03/2009

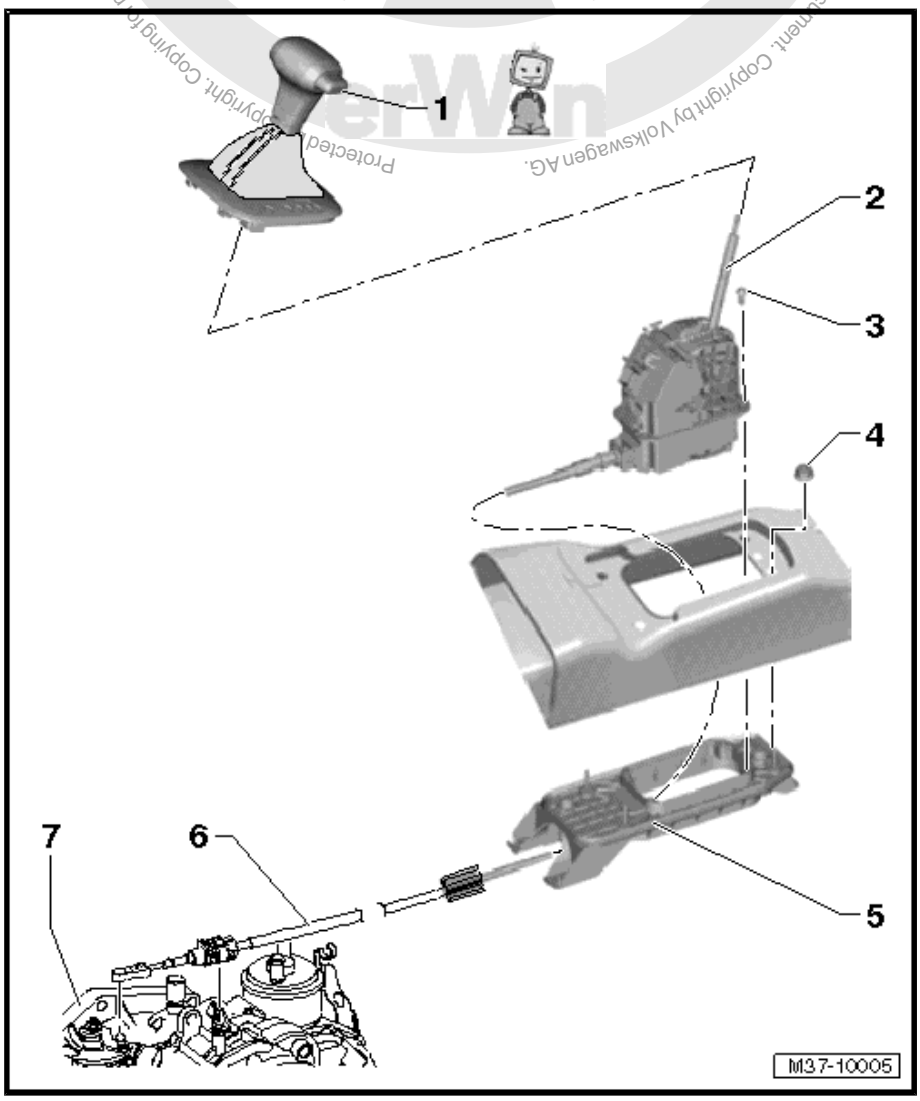

1 - Shift Cover with Handle

- ❑ Do not remove the handle unnecessarily. Unclip only the cover for the emergency release. Refer to ⇒ "4.6 Selector Lever, Emergency Release", page 39 .
- ❑ Removing and installing. Refer to ⇒ "4.7 Selector Lever Handle, Removing and Installing", page 40 .

2 - Selector Lever and Selector Mechanism with Selector Lever Cable

- ❑ With integrated Selector Lever Sensor System Control Module - J587- with Selector Lever - E313- , Tiptronic Switch - F189- , Selector Lever Park Position Lock Switch - F319- and Shift Lock Solenoid - N110- .
- ❑ The selector lever cable can only be replaced together with the selector mechanism. Refer to ⇒ "5.2 Selector Mechanism, Removing and Installing, Vehicles from 03/2009", page 47 .
- ❑ Do not grease the selector lever cable.
- ❑ Removing and installing. Refer to ⇒ "5.2 Selector Mechanism, Removing and Installing, Vehicles from 03/2009", page 47 .
- ❑ Checking. Refer to ⇒ "4.4 Selector Lever Cable, Checking", page 37 .
- ❑ Adjusting. Refer to ⇒ "4.5 Selector Lever Cable, Adjusting", page 38 .

3 - Bolt

- ❑ 8 Nm

4 - Hex Nut with Collar

- ❑ 8 Nm
- ❑ Quantity: 4

5 - Gearshift Housing

6 - Selector Lever Cable

- ❑ Must not be removed from the selector mechanism and is replaced together as a single component.

7 - Transmission

5.2 Selector Mechanism, Removing and Installing, Vehicles from 03/2009

⇒ "5.2.1 Selector Mechanism with Selector Housing, Removing and Installing", page 47

⇒ "5.2.2 Selector Mechanism without Selector Housing, Removing and Installing", page 51

Note

- *Do not bend or kink the selector lever cable.*
- *Do not lubricate the selector lever cable.*

5.2.1 Selector Mechanism with Selector Housing, Removing and Installing

Brief Description

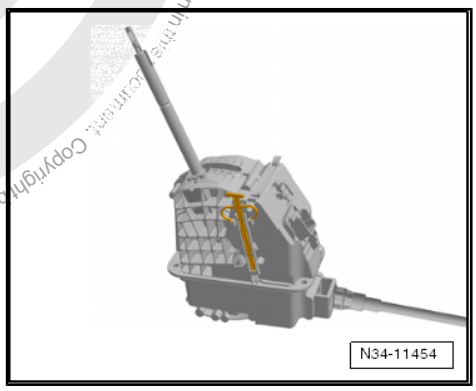

The selector mechanism and the selector lever cable must be separated from each other. Both are removed with the selector housing.

Remove the center console inside the vehicle interior.

It is necessary to remove the heat shield under the vehicle.

It is possible to remove and install the selector mechanism with selector lever cable alone without the selector housing. Refer to ⇒ "5.2.2 Selector Mechanism without Selector Housing, Removing and Installing", page 51 .

Note

After installation, the selector lever cable must be checked for ease of movement and adjusted.

Removing

Copyright by Volkswagen AG. Volkswagen AG does not guarantee or accept any liability with respect to the correctness of information in this document. Copyright by Volkswagen AG. Protected by copyright. Copying for private or commercial purposes, in part or in whole, is not permitted unless authorised by Volkswagen AG.

– Move the selector lever into “P”.

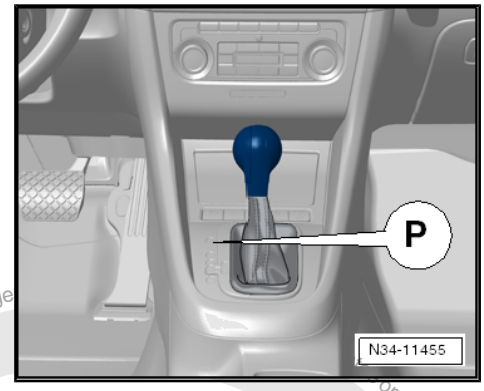

– Remove the selector lever handle and disconnect the connector -2- from the cover while doing so. Refer to ⇒ “4.7 Selector Lever Handle, Removing and Installing”, page 40 .

– Remove the center console. Refer to ⇒ Body Interior; Rep. Gr. 68 ; Center Console .

– Disconnect the connector -1- from the selector mechanism to the vehicle wiring harness.

– Remove the center console. Refer to ⇒ Body Interior; Rep. Gr. 68 ; Center Console .

– Remove the air filter housing:

♦ Gasoline engine. Refer to ⇒ Rep. Gr. 24 ; Air Filter; Air Filter Housing, Removing and Installing .

♦ TDI engine. Refer to ⇒ Rep. Gr. 23 ; Diesel Direct Injection System; Overview - Air Filter .

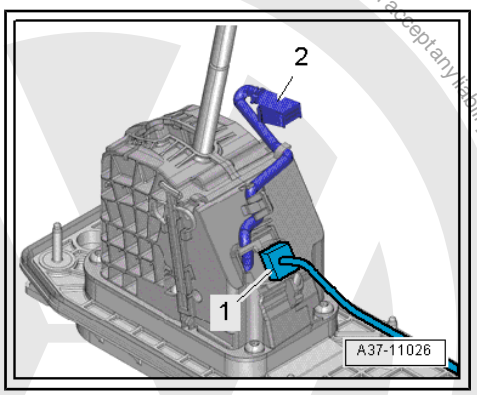

– To remove the selector lever cable from the transmission, release the selector lever cable -arrows 1- and then remove it from the cable bracket -arrow 2-.

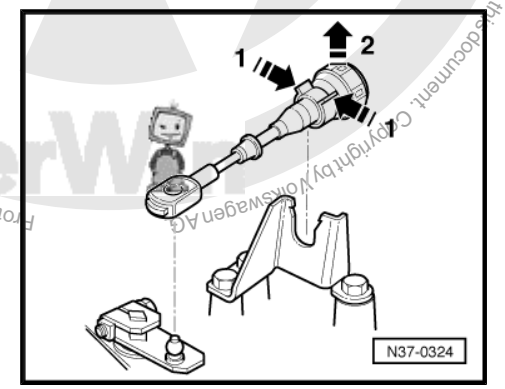

Note

♦ *Do not use pliers because the mounting tabs on the cable bracket could break off.*

♦ *Do not bend or kink the selector lever cable.*

– Pry the selector lever cable -1- off the selector shaft lever -3- using for example an open end wrench -2-.

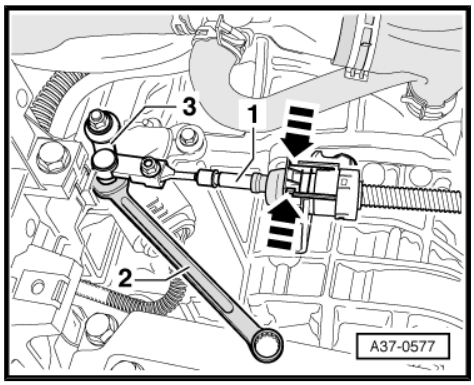

Protected by copyright. Copying for private or commercial purposes, in part or in whole, is not permitted unless authorised by Volkswagen AG. Copyright by Volkswagen AG. We do not accept any liability with respect to the correctness of information in this document.

– Disconnect the selector lever cable -1- from the bracket -arrow- on the transmission.

– Raise the vehicle.

To remove the selector mechanism, the heat shield under the selector mechanism must be removed as follows:

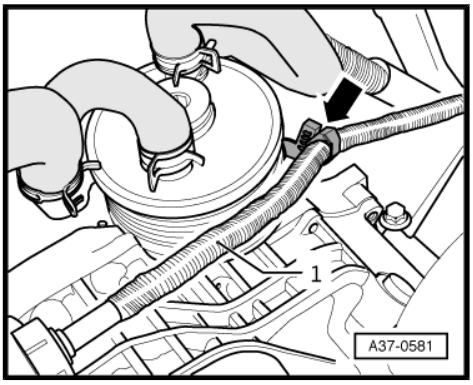

> ⚠ **Caution**
>
> *Risk of damaging the decoupling element.*
>
> - *Do not bend the decoupling element more than 10°.*
> - *Do not load the decoupling element.*
> - *Do not damage the wire mesh on the decoupling element.*

– Loosen the nuts on the clamping sleeve -1- and then slide it toward the rear.

– Remove the front tunnel brace -arrows- from the underbody.

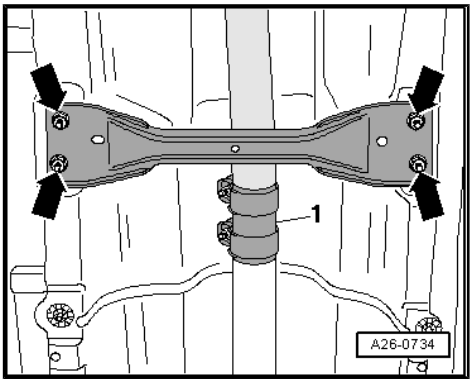

– If necessary remove the exhaust system bracket from the subframe -arrows-.

– Tie up the front exhaust pipe.

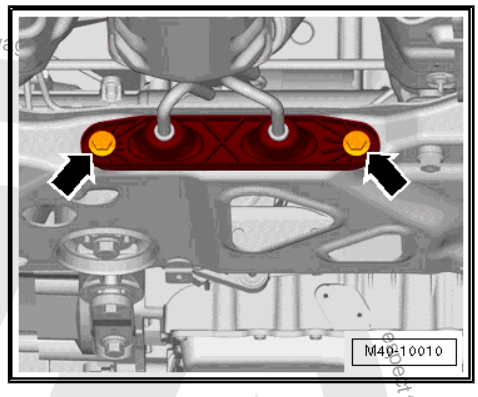

– If equipped, remove nuts -1 and 2-, and remove the rear tunnel brace.

– Disengage the center muffler and the rear muffler from the retaining loops -arrows- and tie them to the body for example with a wire. Remove the exhaust system rear section, if necessary.

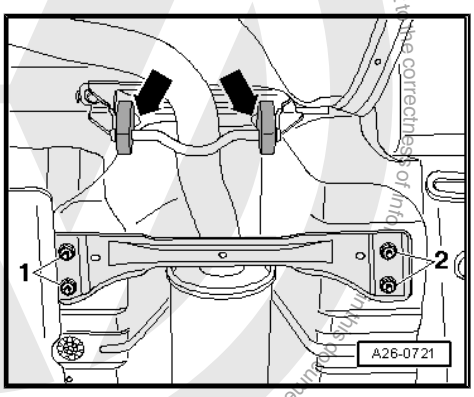

Protected by copyright. Copying for private or commercial purposes, in part or in whole, is not permitted unless authorised by Volkswagen AG. Volkswagen AG does not guarantee or accept any liability with respect to the correctness of information in this document. Copyright by Volkswagen AG.

– Remove the underbody trim panel nuts -arrows-.
– Remove the lock washers -2 and 3-.
– Lower the underbody trim panel on the inside just enough until the heat shield -1- for the center tunnel can be removed.

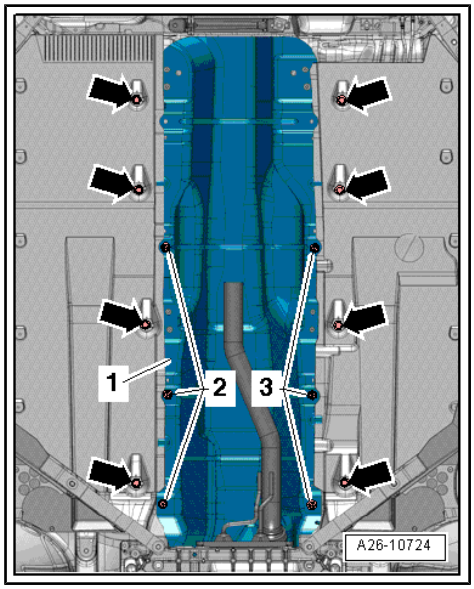

Note

A second technician is required under the vehicle to remove the selector mechanism.

– Remove the nuts -arrows- in the vehicle interior.
– Remove the bracket -A-, if equipped.
– Remove the selector mechanism -B- with the selector lever cable and selector housing downward.

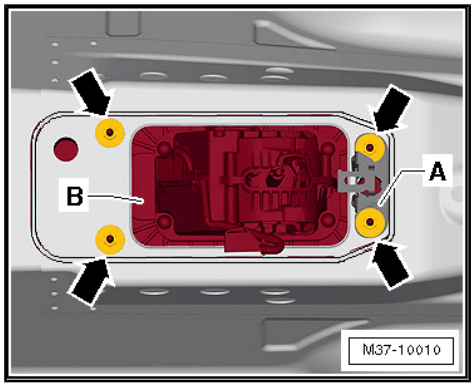

Installing

Install in reverse order of removal.

Note

- *Do not bend or kink the selector lever cable.*
- *Do not lubricate the selector lever cable.*
- *Tightening specifications. Refer to* *⇒ "5.1 Overview - Selector Mechanism from 03/2009", page 46* .

– Carefully press the selector lever cable onto the selector shaft lever and into the cable bracket.

Protected by copyright. Copying for private or commercial purposes, in part or in whole, is not permitted unless authorised by Volkswagen AG. Volkswagen AG does not guarantee or accept any liability with respect to the correctness of information in this document. Copyright by Volkswagen AG.

– Install the heat shield -1- under the selector mechanism and attach with the lock washers -2 and 3-.

– Attach the underbody trim panel to the body -arrows-. Refer to ⇒ Body Exterior; Rep. Gr. 50 ; Underbody Trim Panels .

– Install the exhaust system and align it without tension. Refer to ⇒ Rep. Gr. 26 ; Exhaust System; Exhaust System, Installing without Tension or ⇒ Rep. Gr. 26 ; Exhaust Pipes/ Mufflers; Exhaust System, Installing without Tension .

– Install the tunnel braces under the exhaust system. Refer to ⇒ Body Exterior; Rep. Gr. 50 ; Tunnel Brace .

– Install the center console. Refer to ⇒ Body Interior; Rep. Gr. 68 ; Center Console .

– Install the selector lever handle. Refer to ⇒ “4.7 Selector Lever Handle, Removing and Installing”, page 40 .

– Adjust the selector lever cable. Refer to ⇒ “4.5 Selector Lever Cable, Adjusting”, page 38 .

– Check the selector mechanism. Refer to ⇒ “4.9 Selector Mechanism, Checking”, page 44 .

– Install the air filter housing:

♦ Gasoline engine. Refer to ⇒ Rep. Gr. 24 ; Air Filter; Air Filter Housing, Removing and Installing .

♦ TDI engine. Refer to ⇒ Rep. Gr. 23 ; Diesel Direct Injection System; Overview - Air Filter .

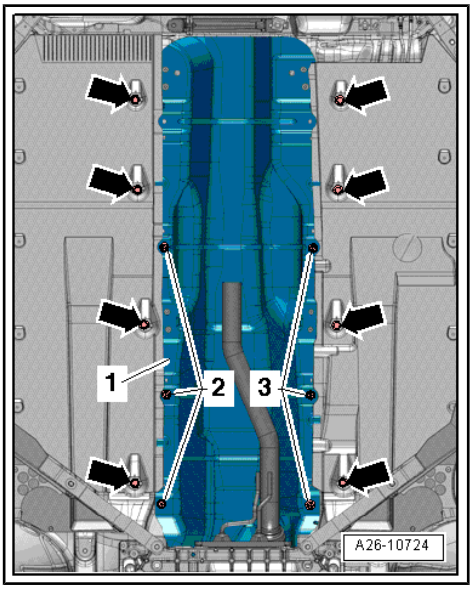

5.2.2 Selector Mechanism without Selector Housing, Removing and Installing

Brief Description

The selector mechanism and the selector lever cable must be separated from each other. Both are removed together.

Remove the center console inside the vehicle interior.

A cord is attached to the selector lever cable prior to removal. The cord is used to remove and install the selector lever cable between the tunnel and the heat shield.

The selector mechanism with selector lever cable can be removed and installed together with the selector housing. Refer to ⇒ “5.2.1 Selector Mechanism with Selector Housing, Removing and Installing”, page 47 .

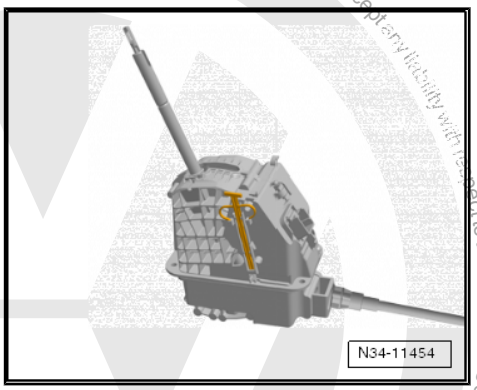

Removing

– Move the selector lever into “P”.

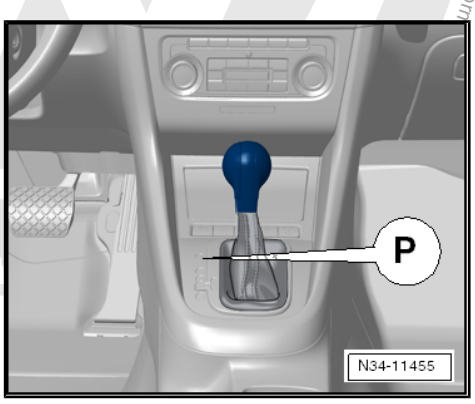

Protected by copyright. Copying for private or commercial purposes, in part or in whole, is not permitted unless authorized by Volkswagen AG. Volkswagen AG does not guarantee or accept any liability with respect to the correctness of information

– Remove the selector lever handle and disconnect the connector -2- from the cover while doing so. Refer to ⇒ "4.7 Selector Lever Handle, Removing and Installing", page 40 .

– Remove the center console. Refer to ⇒ Body Interior; Rep. Gr. 68 ; Center Console .

– Disconnect the connector -1- from the selector mechanism to the vehicle wiring harness.

– Remove the center console. Refer to ⇒ Body Interior; Rep. Gr. 68 ; Center Console .

– Remove the air filter housing:

♦ Gasoline engine. Refer to ⇒ Rep. Gr. 24 ; Air Filter; Air Filter Housing, Removing and Installing .

♦ TDI engine. Refer to ⇒ Rep. Gr. 23 ; Diesel Direct Injection System; Overview - Air Filter .

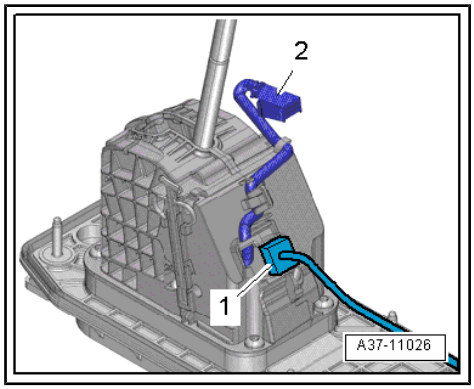

– To remove the selector lever cable from the transmission, release the selector lever cable -arrows 1- and then remove it from the cable bracket -arrow 2-.

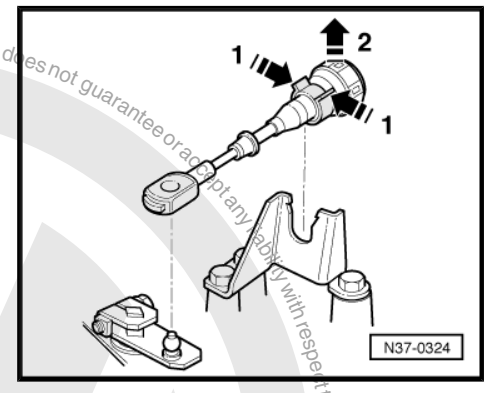

Note

♦ *Do not use pliers because the mounting tabs on the cable bracket could break off.*

♦ *Do not bend or kink the selector lever cable.*

– Pry the selector lever cable -1- off the selector shaft lever -3- using for example an open end wrench -2-.

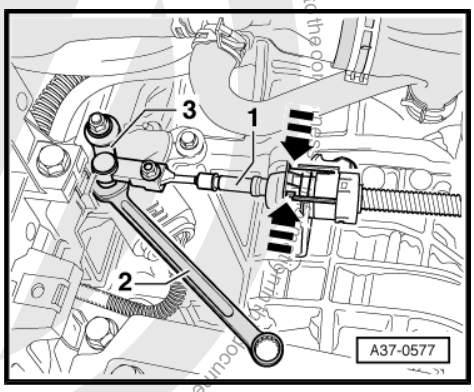

– Disconnect the selector lever cable -1- from the bracket -arrow- on the transmission.

– Attach a longer cord to the end of the selector lever cable. The cord is used to guide the selector lever cable between the tunnel and the heat shield during installation.

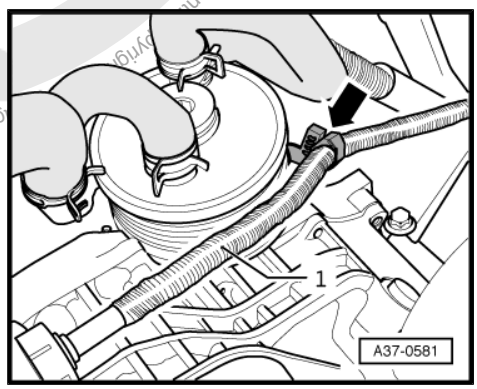

Copyright. Copying for private or commercial purposes, in part or in whole, is not permitted unless authorised by Volkswagen AG. Volkswagen AG does not guarantee or accept any liability with respect to the correctness of information in this document.

– Remove the four bolts attaching the selector mechanism to the selector housing.

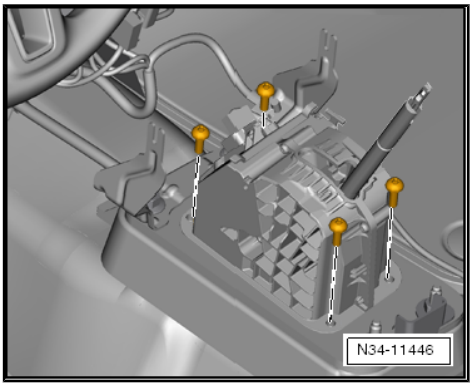

– Pull the selector mechanism and selector lever cable out of the center tunnel. Make sure the cord is pull through far enough so that it can reached from inside the engine compartment.

– Remove the selector lever cable cord.

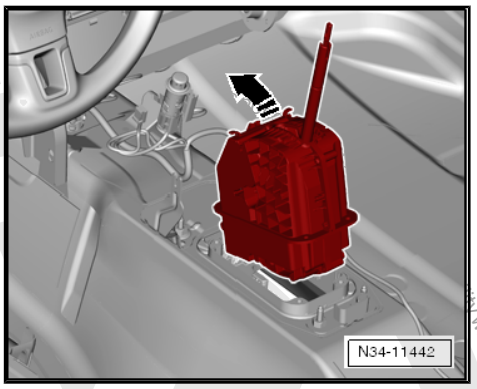

Note

The selector mechanism is available only together with the selector housing and selector lever cable. Refer to the Parts Catalog.

Installing

Install in reverse order of removal. Note the following:

A second technician will be needed for inserting the selector lever cable from the passenger compartment into the engine compartment.

Note

- *Do not bend or kink the selector lever cable.*
- *Do not lubricate the selector lever cable.*
- *Tightening specifications. Refer to* *⇒ "5.1 Overview - Selector Mechanism from 03/2009", page 46* .

– Secure the cord that was involved when removing the selector mechanism from the engine compartment on the end of the selector lever cable.

– Guide the selector mechanism and selector lever cable through the opening in the center tunnel.

– From the engine compartment, the second technician pulls the cord with the selector lever cable through the tunnel until it is possible to attach the selector lever cable to the cable bracket.

– Remove the selector lever cable cord.

Protected by copyright. Copyright by Volkswagen AG. Copyright for private or commercial purposes, in part or in whole, is not permitted unless authorised by Volkswagen AG. Volkswagen AG does not guarantee or accept any liability with respect to the correctness of information in this document.

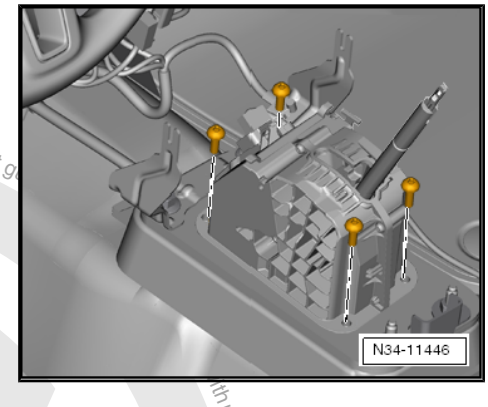

– Attach the selector mechanism to the selector housing with four bolts.

– Install the center console. Refer to ⇒ Body Interior; Rep. Gr. 68 ; Center Console .

– Install the selector lever handle. Refer to ⇒ “4.7 Selector Lever Handle, Removing and Installing”, page 40 .

– Adjust the selector lever cable. Refer to ⇒ “4.5 Selector Lever Cable, Adjusting”, page 38 .

– Check the selector mechanism. Refer to ⇒ “4.9 Selector Mechanism, Checking”, page 44 .

– Install the air filter housing:

♦ Gasoline engine. Refer to ⇒ Rep. Gr. 24 ; Air Filter; Air Filter Housing, Removing and Installing .

♦ TDI engine. Refer to ⇒ Rep. Gr. 23 ; Diesel Direct Injection System; Overview - Air Filter .

Protected by copyright. Copying for private or commercial purposes, in part or in whole, is not permitted unless authorised by Volkswagen AG. Volkswagen AG does not guarantee or accept any liability with respect to the correctness of information in this document. Copyright by Volkswagen AG.

6 Transmission, Removing and Installing, Jetta from 2005, Golf Wagon from 2007, Jetta Wagon from 2008

⇒ “6.1 Transmission, Removing, Vehicles with 2.0L - 85kW and 2.0L - 110kW Engines”, page 55 .

⇒ “6.2 Transmission, Installing, Vehicles with 2.0L - 85kW and 2.0L - 110kW Engines”, page 60 .

⇒ “6.3 Transmission, Removing, Vehicles with 2.5L - 110 kW and 2.5L -125 kW Engines”, page 63 .

⇒ “6.4 Transmission, Installing, Vehicles with 2.5L - 110 kW and 2.5L - 125 kW Engines”, page 69 .

⇒ “6.5 Tightening Specifications, Transmission to Engine”, page 71 .

6.1 Transmission, Removing, Vehicles with 2.0L - 85kW and 2.0L - 110kW Engines

– Before removing, print out the diagnostic protocol for this vehicle »if possible«. Affix the protocol on to transmission before sending back the removed transmission in the usual way.

Brief Description

The transmission is remove downward separately. The engine remains in the vehicle.

Remove the battery, the battery tray, the air filter and the engine cover »from above«. Both the engine and the transmission are supported and it is possible to remove the left subframe mount.

Remove the noise insulation and the drive axles »from underneath«. The transmission is lowered with the transmission jack.

Note

The subframe is not removed.

Special tools and workshop equipment required

- Engine and Gearbox Jack - VAS6931-
- Torque Wrench 1332 40-200Nm - VAG1332-
- Transmission Support - 3282-
- Transmission Support - Mounting Plate 36 - 3282/36-
- Hose Clamps - Up To 25mm - 3094-
- Insert Tool - 18mm - T10179-
- Socket - Sw15 - V/175-
- Engine Support Bridge - 10-222A-
- Engine Support Bridge - Gearbox Adapter - 10-222A/13-
- Tensioning Strap - T10038-

The following describes the “automatic transmission 09G” with a 2.0L FSI gasoline engine. There are only slight differences for the other engine versions. Tightening specifications: transmission to engine »as usual«, detailed for each engine (large and small machine; FSI/MPI engine).

Protected by copyright. Copying for private or commercial purposes, in part or in whole, is not permitted unless authorised by Volkswagen AG. Volkswagen AG does not guarantee or accept any liability with respect to the correctness of information in this document. Copyright by Volkswagen AG.

– Before removing, print out the diagnostic protocol for this vehicle »if possible«. Affix the protocol on to transmission before sending back the removed transmission in the usual way.

Removing

– Move the selector lever into »P«.

– See if a coded radio is installed. If so, obtain the anti-theft code.

– Disconnect the battery ground cable with the ignition switched off. Refer to ⇒ Electrical Equipment; Rep. Gr. 27 ; Battery; Battery, Disconnecting and Connecting .

– Remove the battery and the battery tray. Refer to ⇒ Electrical Equipment; Rep. Gr. 27 ; Battery; Battery, Removing and Installing .

– Remove the engine cover and the air filter with the intake hose.

– To remove the selector lever cable from the transmission, release the selector lever cable -arrows 1- and then remove it from the cable bracket -arrow 2-.

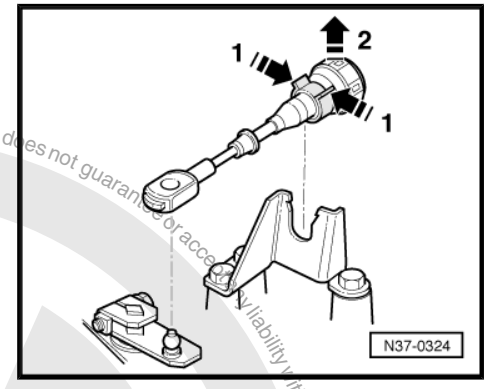

Note

- *Do not use pliers because the mounting tabs on the cable bracket could break off.*
- *Do not bend or kink the selector lever cable.*

– Pry the selector lever cable -1- off the selector shaft lever -3- using for example an open end wrench -2-.

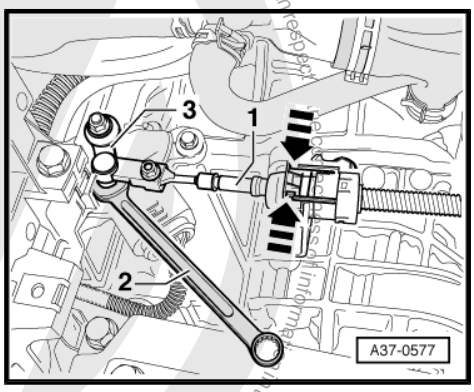

– Mount the Hose Clamps - Up To 25mm - 3094- on the hoses and remove the hoses form the ATF cooler.

– Disconnect the connectors from the transmission and starter.

– Remove the upper starter bolt.

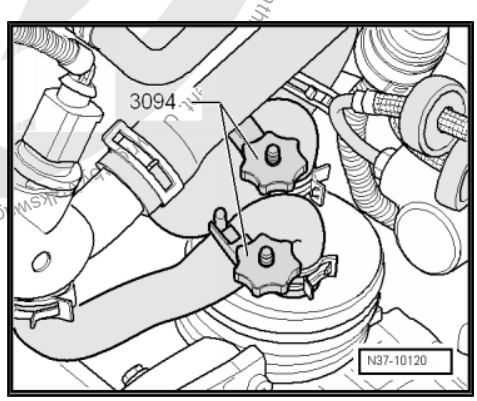

Protected by copyright. Copying for private or commercial purposes, in part or in whole, is not permitted unless authorised by Volkswagen AG. Volkswagen AG does not guarantee or accept any liability with respect to the correctness of information.

– Mount the Engine Support Bridge - 10-222A- and support the engine with the transmission. Do not lift.

– Remove the upper engine/transmission connecting bolts.

Remove the bolts using the Insert Tool 18 mm - T10179- . Use the lower tightening specification when tightening. Refer to ⇒ “6.5 Tightening Specifications, Transmission to Engine”, page 71 .

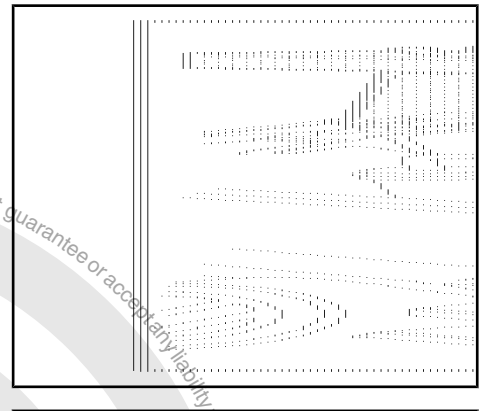

– Remove the ground cable from the transmission bracket -A-, if equipped.

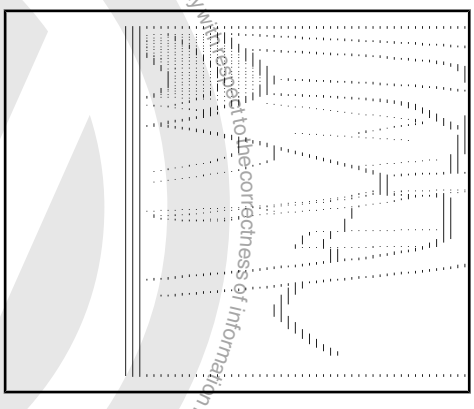

– Remove the bolts -2- that attach the transmission mount to the transmission bracket -A- and the bolts -1- that attach the transmission bracket to the transmission.

The transmission bracket -A- will be removed later.

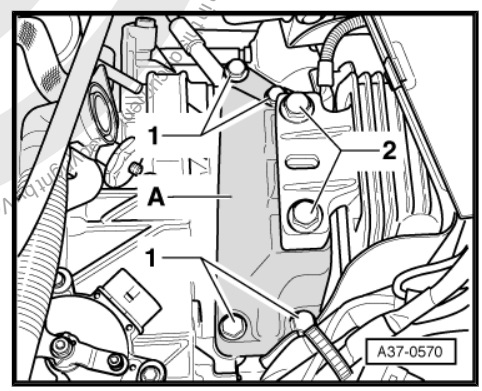

The left driveshaft must be removed later in the procedure.

– With the vehicle still standing on its wheels, loosen the left front collar bolt -arrow- a maximum 90°, otherwise the wheel bearing will get damaged. Refer to ⇒ Suspension, Wheels, Steering; Rep. Gr. 40 ; Drive Axles, Removing and Installing .

– Raise the vehicle and remove the front wheels.

– Remove the noise insulation. Refer to ⇒ Body Exterior; Rep. Gr. 50 ; Noise Insulation .

– Remove the vacuum pump with its bracket and lines. »The pump is located near the ATF filler tube.«

– Disconnect the connectors from the transmission, if this has not already been done.

– Remove the starter. Refer to ⇒ Electrical Equipment; Rep. Gr. 27 ; Starter; Starter, Removing and Installing .

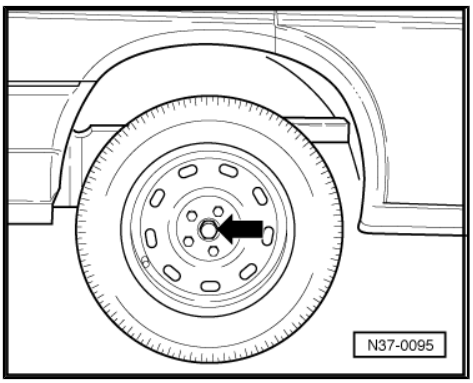

Protected by copyright. Copying for private or commercial purposes, in part or in whole, is not permitted unless authorised by Volkswagen AG. Volkswagen AG does not guarantee or accept any liability with respect to the correctness of information in this document. Copyright by Volkswagen AG.

– Remove the pendulum support: First bolt -A- then bolts -B-.

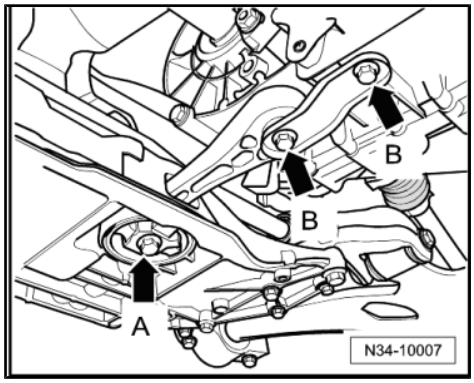

Note

When installing tighten that bolt -B- first, and then bolt -A-. Refer to ⇒ Suspension, Wheels, Steering; Rep. Gr. 40 for the tightening specifications.

– Remove the control arms from the wheel bearing housing on both sides.

Tightening specifications. Refer to ⇒ Suspension, Wheels, Steering; Rep. Gr. 40 .

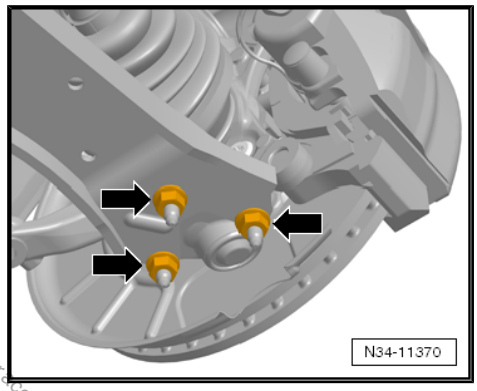

– If equipped, remove the heat shield above the right drive axle -arrows-.

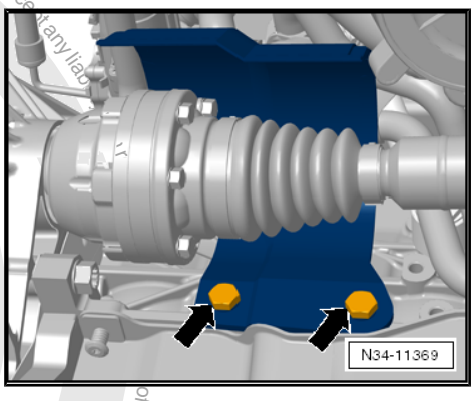

– Remove both drive axles from the transmission. Refer to ⇒ Suspension, Wheels, Steering; Rep. Gr. 40 ; Drive Axles, Removing and Installing .

– Remove the left drive axle. Refer to ⇒ Suspension, Wheels, Steering; Rep. Gr. 40 ; Drive Axles, Removing and Installing .

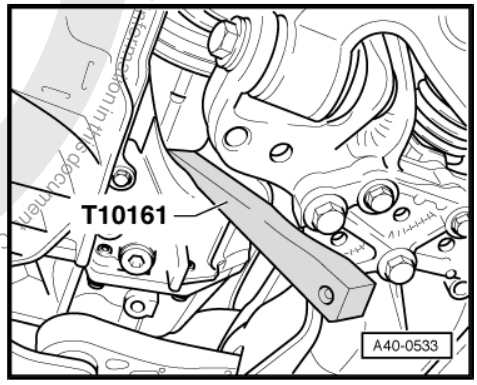

Protected by copyright. Copying for private or commercial purposes, in part or in whole, is not permitted unless authorised by Volkswagen AG. Volkswagen AG does not guarantee or accept any liability with respect to the correctness of information in this document. Copyright by Volkswagen AG.

– Lift the right drive axle as far as possible and then tie it up.

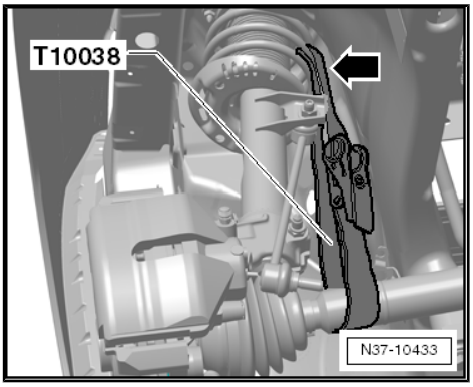

– Remove the subframe mount transmission bracket. To do this slightly lower the engine with the transmission using the Engine Support Bridge - 10-222A- spindles.

Four turns are sufficient.

– Remove the exhaust system bracket from the transmission, if equipped.

– Remove the lower engine/transmission connecting bolts.

– For safety, leave one bolt installed that is easily accessible.

– Start with the two lower bolts.

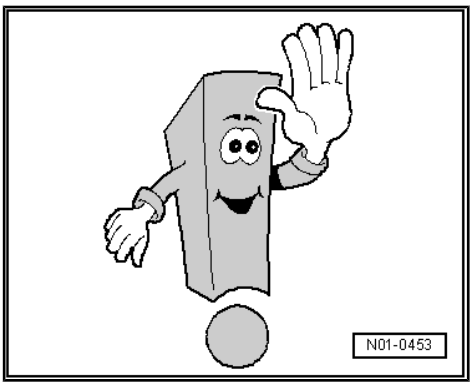

Note

On some of the smaller engines, up to 1.6L, one of the lower -bolts- can be loosened from the transmission but cannot be removed out of its hole.

– If it is necessary to remove this bolt, then the front exhaust pipe must be removed. Refer to ⇒ Rep. Gr. 26 .

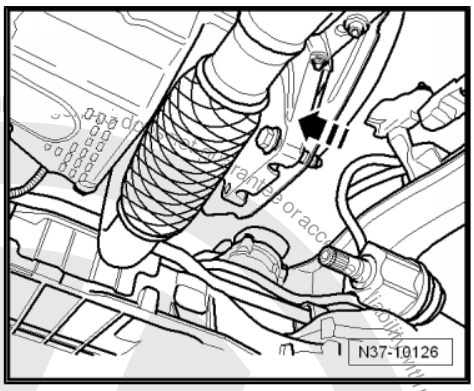

The hole for removing the converter nuts on the back of the engine is covered with a rubber plug.

– Remove this plug.

– Remove the six converter nuts -arrow- with the Socket - Sw15 - V/175- .

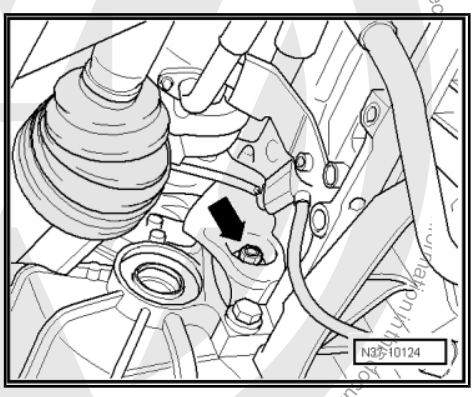

Note

Carefully rotate the engine further!

Protected by copyright. Copying for private or commercial purposes, in part or in whole, is not permitted unless authorised by Volkswagen AG. Volkswagen AG. Copyright by Volkswagen AG.

Protected by copyright. Copyright for private or commercial purposes, in part or in whole, is not permitted unless authorised by Volkswagen AG. Volkswagen AG does not guarantee or accept any liability with respect to the correctness of information in this document. Copyright by Volkswagen AG.

– Before removing the last connecting bolt, support the transmission with the Engine and Gearbox Jack - VAS6931- , the Transmission Support - 3282- and the Transmission Support - Mounting Plate 36 - 3282/36- .
– Use the bolt -1- to secure the transmission to the Transmission Support - 3282- .
– Remove the last bolt.
– Press the transmission off of the engine, at the same time press the torque converter off of the engine drive plate.
– Make sure there is enough clearance around the subframe while lowering. Adjust the Transmission Support - 3282- slightly, if necessary.

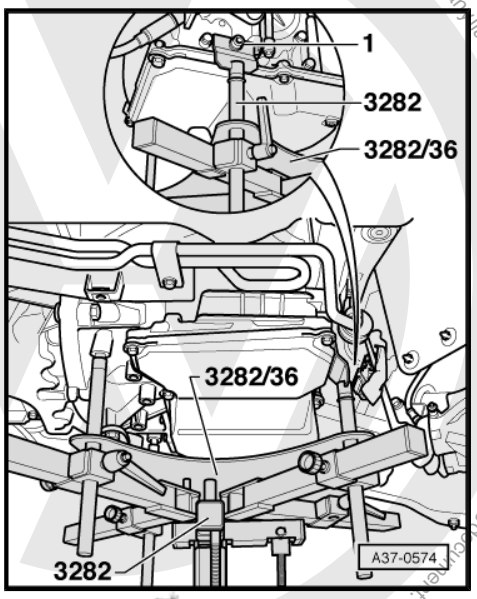

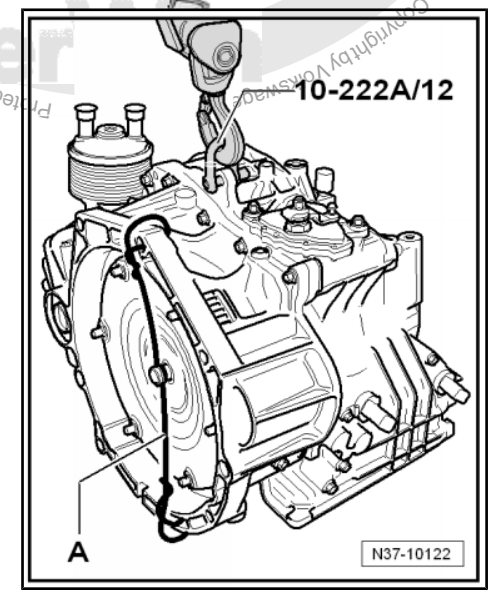

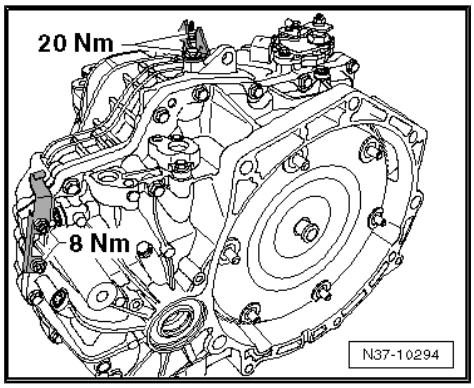

Note

- *The connector on the transmission must not be damaged when removing and installing the transmission. Replace the wiring harness in the transmission if the connector gets damaged. Refer to* *⇒ "4.1 Overview - Valve Body", page 128* *.*
- *Pay attention to the torque converter. It must be removed together with the transmission. Secure the torque converter with, for example a wire -A- to prevent it from falling out.*
- *Bear in mind that when installing a new transmission, the cable bracket and the selector lever cable bracket for example must be replaced.*

6.2 Transmission, Installing, Vehicles with 2.0L - 85kW and 2.0L - 110kW Engines

– Check that the alignment sleeves are pressed into the engine flange.

– Make sure the intermediate plate fits correctly between the engine and the transmission. The plate must contact the engine along entire perimeter when pressing lightly against engine using both hands. If it is above the engine, then it is not hooked into the cylinder block correctly.

– Make sure the torque converter is installed correctly. Refer to ⇒ “1.1 Torque Converter, Removing and Installing”, page 10 .

Further installation is performed in the reverse order of the removal.

The engine and the transmission must be mounted in the subframe mount without tension. Refer to ⇒ Rep. Gr. 10 ; Engine, Removing and Installing for the procedure.

– Replace all the bolts from the left subframe mount.

– Install all new bolts first by hand.

Protected by copyright. Copying for private or commercial purposes, in whole or in part, is not permitted unless authorised by Volkswagen AG. Volkswagen AG does not guarantee or accept any liability with respect to the correctness of information in this document. Copyright by Volkswagen AG.

First tighten the bolts -1- to 40 Nm +90° when installing the transmission bracket -A- on the transmission.

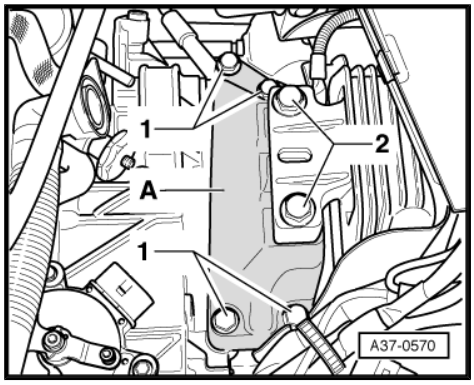

– Align the engine/transmission in its installed position. Lift until the transmission bracket is touching the transmission mount completely.

> **Caution**
>
> *There is a risk of damaging the threads in transmission bracket by inserting bolts at an angle.*
>
> ♦ *Before installing the bolts -2-, the transmission bracket and transmission mount support arm must be absolutely parallel to each other. If necessary, lift the back of the transmission using the Engine and Gearbox Jack - VAS6931- .*

Adjust the »old fit« between both bolts using a screwdriver when tightening the transmission bracket to the transmission mount bolts -2-. Tighten the two larger bolts to 60 Nm +90°.

Transmission to engine tightening specifications. Refer to ⇒ “6.5 Tightening Specifications, Transmission to Engine”, page 71 .

– Install the pendulum support. Refer to ⇒ Suspension, Wheels, Steering; Rep. Gr. 40 ; Subframe; Overview - Subframe .

– Attach the drive axles to the transmission. Refer to ⇒ Suspension, Wheels, Steering; Rep. Gr. 40 ; Drive Axles, Removing and Installing .

– Align the exhaust system free of tension. Refer to ⇒ Rep. Gr. 26 ; Exhaust System; Exhaust System, Installing without Tension or ⇒ Rep. Gr. 26 ; Exhaust Pipes/Mufflers; Exhaust System, Installing without Tension .

– Install the starter. Refer to ⇒ Electrical Equipment; Rep. Gr. 27 ; Starter; Starter, Removing and Installing .

– Connect the coolant hoses to the ATF cooler and check the coolant level. Refer to ⇒ Rep. Gr. 19 .

– Attach the selector lever cable to the transmission and adjust it. Refer to ⇒ “4.5 Selector Lever Cable, Adjusting”, page 38 .

– Install the battery tray and the battery. Refer to ⇒ Electrical Equipment; Rep. Gr. 27 ; Battery; Battery, Removing and Installing .

– Check the ATF level after installing. Refer to ⇒ “11 ATF Level, Checking and Filling”, page 112 .

– Install the noise insulation. Refer to ⇒ Body Exterior; Rep. Gr. 50 ; Noise Insulation .

– Install the wheels. Refer to ⇒ Suspension, Wheels, Steering; Rep. Gr. 44 ; Wheel Installation Tightening Specifications .

– Perform a basic setting. Connect the Vehicle Diagnostic Tester and then select “Perform basic setting” under `Guided Functions`.

Tightening Specifications

Transmission to engine tightening specifications. Refer to ⇒ “6.5.1 Tightening Specifications, Vehicles with 2.0L - 85kW and 2.0L - 110kW Engines”, page 71 .

Protected by copyright. Copying for private or commercial purposes, in part or in whole, is not permitted unless authorized by Volkswagen AG. Volkswagen AG does not guarantee or accept any liability with respect to the correctness of information in this document. Copyright by Volkswagen AG.

Component	Nm
Drive plate to torque converter	60
Selector cable bracket to transmission	8
Cable bracket to transmission	20

6.3 Transmission, Removing, Vehicles with 2.5L - 110 kW and 2.5L -125 kW Engines

– Before removing, print out the diagnostic protocol for this vehicle »if possible«. Affix the protocol on to transmission before sending back the removed transmission in the usual way.

Brief Description

The transmission is removed downward separately. The engine remains in the vehicle.

Remove the battery, the battery tray, the air filter and the engine cover »from above«. Both the engine and the transmission are supported and it is possible to remove the left subframe mount.

Remove the noise insulation and the drive axles »from underneath«. The transmission is lowered with the transmission jack.

Note

The subframe is not removed.

Special tools and workshop equipment required

- Engine and Gearbox Jack - VAS6931-
- Socket - Sw15 - V/175-
- Transmission Support - 3282-
- Drive Axle Wedge Tool - T10161-
- Torque Wrench 1332 40-200Nm - VAG1332-
- Transmission Support - Mounting Plate 36 - 3282/36-
- Engine Support Bridge - 10-222A-
- Engine Support Bridge - Engine Support Feet - 10-222A/8-
- Engine Support - Automatic Transmission Hook - 10-222A/7-
- Engine Support - Bracket w/Spindle and Hook - 10-222A/10-
- Engine Support Bridge - Engine Support 3 - 10-222A/3-
- Engine/Gearbox Support Shackle (2 pc.) - 10-222A/12-
- Tensioning Strap - T10038-

Removing

– Move the selector lever into »P«.

– See if a coded radio is installed. If so, obtain the anti-theft code.

– Disconnect the battery ground cable. Refer to ⇒ Electrical Equipment; Rep. Gr. 27 ; Battery; Battery, Disconnecting and Connecting .

Protected by copyright. Copying for private or commercial purposes, partially or completely is not permitted unless authorised by Volkswagen AG. Volkswagen AG does not guarantee or accept any liability with respect to the correctness of information in this document. Copyright by Volkswagen AG.

The left drive axle must be removed later in the procedure.

– With the vehicle still standing on its wheels, loosen the left front collar bolt -arrow- a maximum 90°, otherwise the wheel bearing will get damaged. Refer to ⇒ Suspension, Wheels, Steering; Rep. Gr. 40 ; Drive Axles, Removing and Installing .

– Remove the engine cover and the air filter.

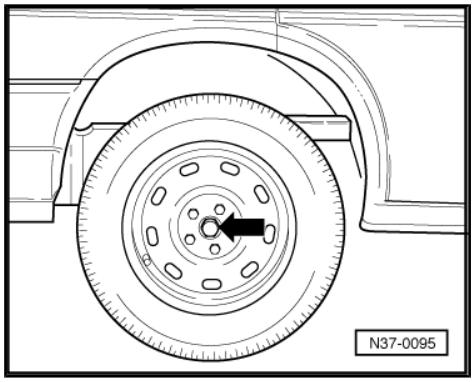

– Disconnect the hoses -arrows- and remove the intake hose from the throttle valve.

– Remove the battery and the battery tray. Refer to ⇒ Electrical Equipment; Rep. Gr. 27 ; Battery; Battery, Removing and Installing .

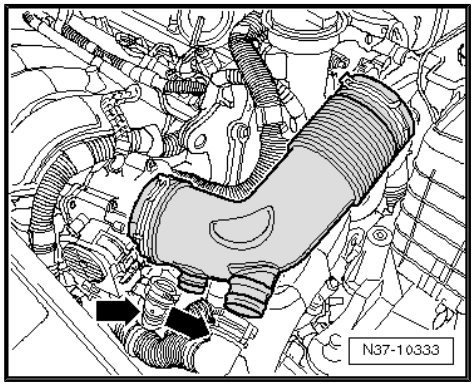

– To remove the selector lever cable from the transmission, release the selector lever cable -arrows 1- and then remove it from the cable bracket -arrow 2-.

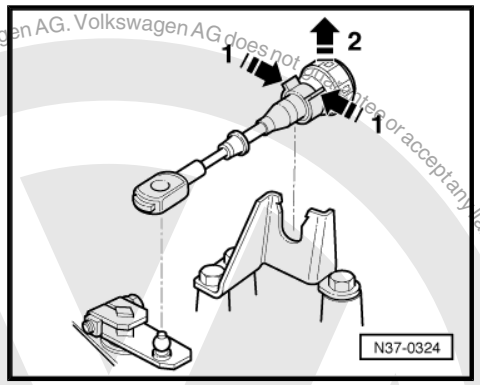

Note

- *Do not use pliers because the mounting tabs on the cable bracket could break off.*
- *Do not bend or kink the selector lever cable.*

– Pry the selector lever cable -1- off the selector shaft lever -3- using for example an open end wrench -2-.

– Disconnect the connections from the transmission and starter.

- Multifunction transmission range switch
- Starter
- Ground cable on the transmission bracket.

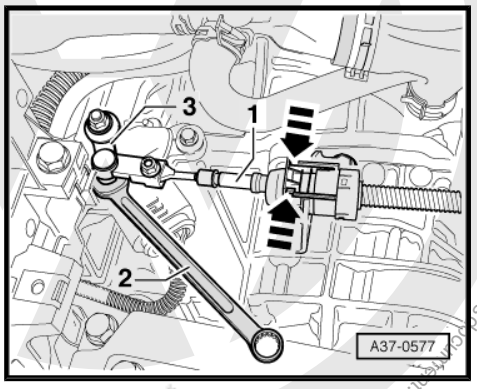

Protected by copyright. Copying for private or commercial purposes, in part or in whole, is not permitted unless authorised by Volkswagen AG. Volkswagen AG does not guarantee or accept any liability with respect to the correctness of information in this document. Copyright by Volkswagen AG.

– Remove the wiring bracket -1- from the starter bolt -arrow-.
– Remove the upper starter bolt.
– Remove the upper engine/transmission connecting bolts.

So that engine and transmission can be supported:

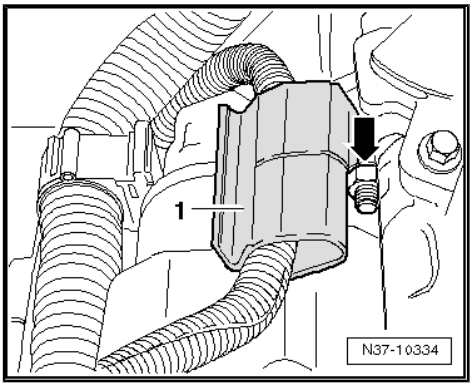

– Remove the wires -1- from the transport strap -3-.
– Remove the transport strap -3- from the engine -2- and pull it out of the eye -arrow-.
– Insert a Engine/Gearbox Support Shackle (2 pc.) - 10-222A/12- in »this« eye.

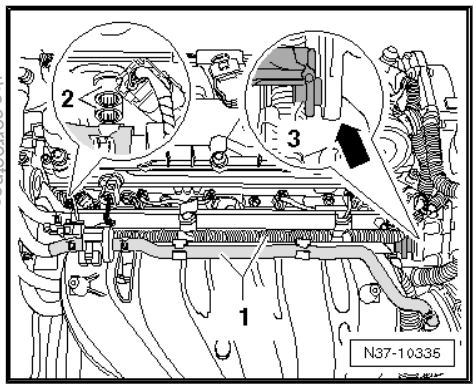

– Install the Engine Support Bridge - 10-222A- .
– Extend the right Engine Support - Bracket w/Spindle and Hook - 10-222A/10- with the Engine Support - Automatic Transmission Hook - 10-222A/7- .

The hook points downward and will be engaged on cylinder block later.

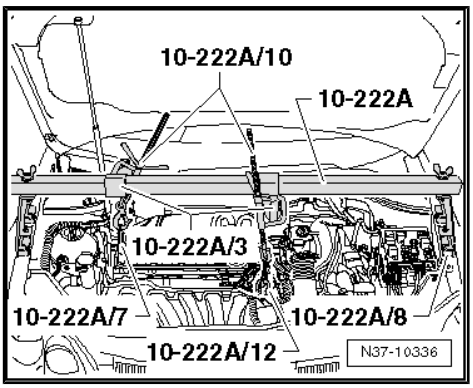

– Raise the vehicle and remove the front wheels.
– Remove the noise insulation. Refer to ⇒ Body Exterior; Rep. Gr. 50 ; Noise Insulation .
– Remove the lower section of the left wheel housing liner. Refer to ⇒ Body Exterior; Rep. Gr. 66 ; Wheel Housing Liner; Front Wheel Housing Liner, Removing and Installing .
– If equipped, remove the heat shield above the right drive axle -arrows-.

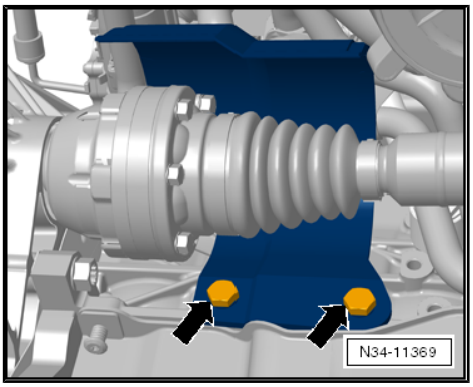

Protected by copyright. Copying for private or commercial purposes, in part or in whole, is not permitted unless authorised by Volkswagen AG. Volkswagen AG does not guarantee or accept any liability with respect to the correctness of information in this document.

– Remove the control arms from the wheel bearing housing on both sides -arrows-.

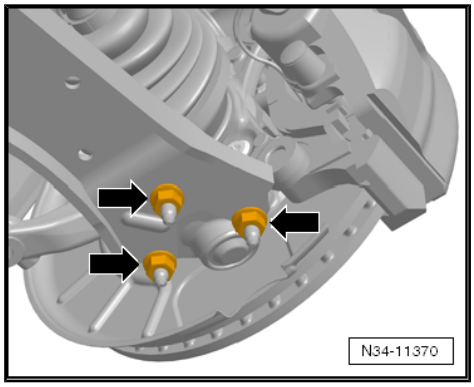

– Remove both drive axles from the transmission. Refer to ⇒ Suspension, Wheels, Steering; Rep. Gr. 40 ; Drive Axles, Removing and Installing .

– Remove the left drive axle. Refer to ⇒ Suspension, Wheels, Steering; Rep. Gr. 40 ; Drive Axles, Removing and Installing .

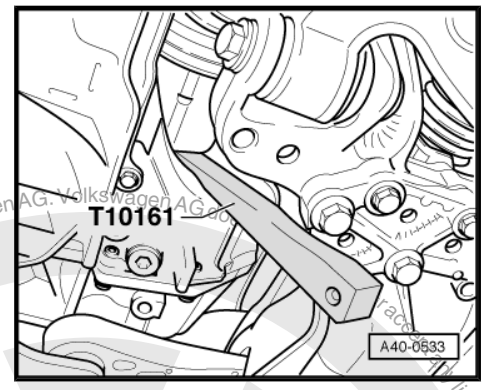

– Lift the right drive axle as far as possible and then tie it up.

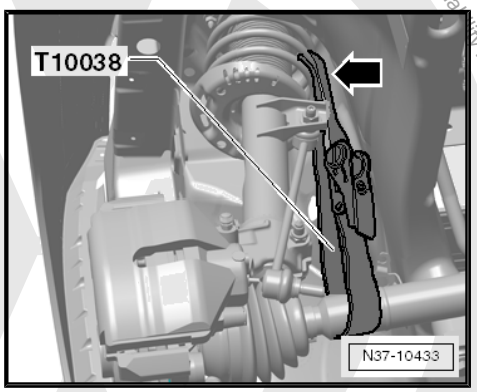

– Disconnect the connectors -1 and 2- from the transmission.

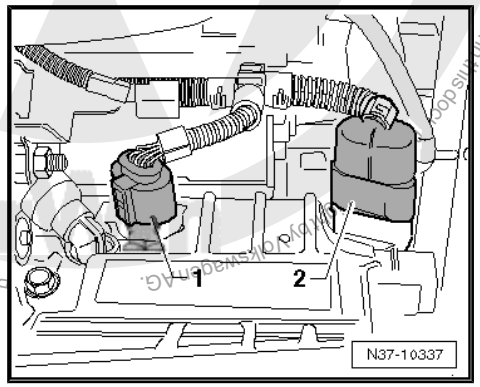

Protected by copyright. Copying for private or commercial purposes, in part or in whole, is not permitted unless authorised by Volkswagen AG. Volkswagen AG does not guarantee or accept any liability with respect to the correctness of information in this document. Copyright by Volkswagen AG.

– Remove the connector from the bracket under the starter -1- and then disconnect it.
– Remove bracket from lower starter bolt.
– Remove the lower starter bolt and then remove the starter.

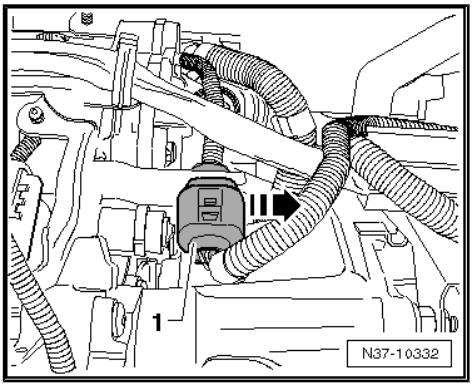

– Remove the pendulum support: First bolt -A- then bolts -B-.
– Drain the coolant. Refer to ⇒ Rep. Gr. 19 ; Coolant System/ Coolant; Coolant, Draining and Filling or ⇒ Rep. Gr. 19 ; Cooling System Components; Coolant, Draining and Filling .

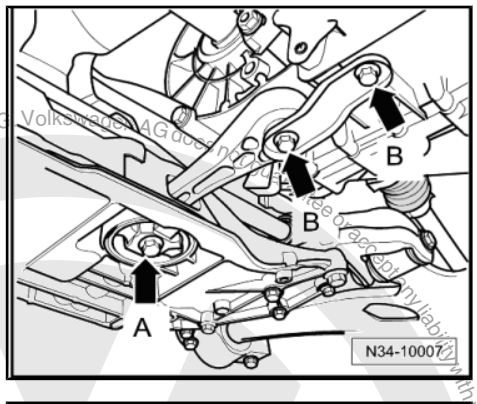

– Turn the cap -1- in the direction of -arrow- and remove it.

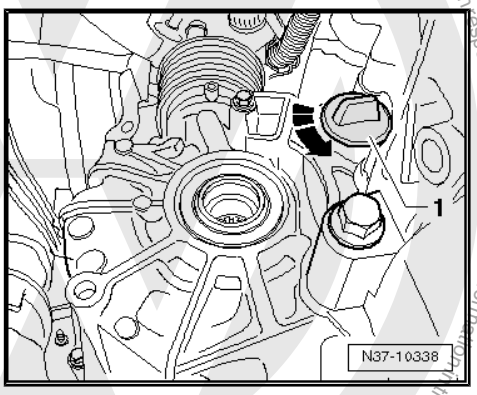

– Remove the six converter nuts -arrow- with the Socket - Sw15 - V/175- .

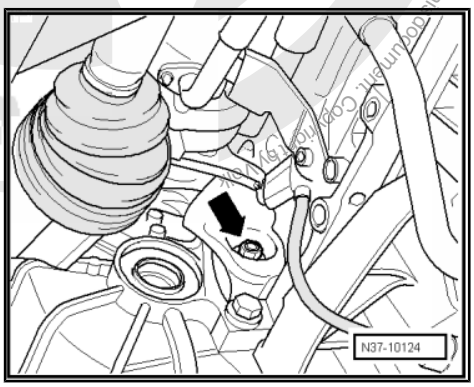

Note

Carefully rotate the engine further!

Protected by copyright. Copying for private or commercial purposes, in part or in whole, is not permitted unless authorised by Volkswagen AG. Volkswagen AG does not guarantee or accept any liability with respect to the correctness of information in this document. Copyright by Volkswagen AG.

– Engage the Engine Support - Automatic Transmission Hook - 10-222A/7- on the cylinder block.

– Remove the coolant hoses from the ATF cooler.

Tension the right spindle one turn (more turns are not necessary).

– Support the engine and transmission with the left spindle. Do not lift.

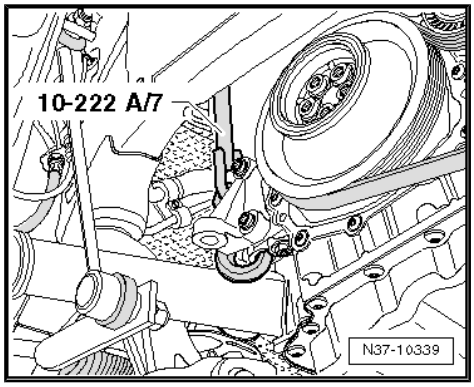

– Remove the transmission mount bolts -2- to the transmission bracket -A- and remove the transmission bracket bolts -1- to the transmission.

– Remove the transmission bracket -A-. To do so, slightly lower the engine with the transmission using the spindles of the Engine Support Bridge - 10-222A- .

Four turns are sufficient.

– Remove the lower engine/transmission connecting bolts.

– For safety, leave one bolt installed that is easily accessible.

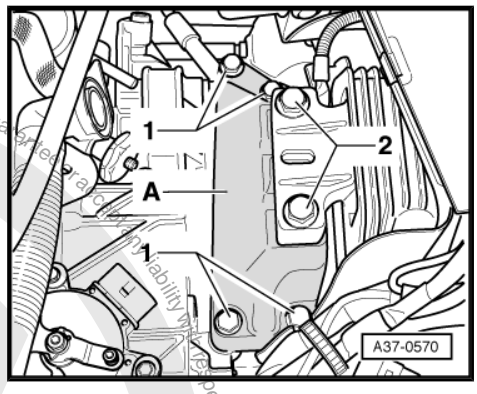

– Before removing the last connecting bolt, support the transmission with the Engine and Gearbox Jack - VAS6931- , the Transmission Support - 3282- and the Transmission Support - Mounting Plate 36 - 3282/36- .

– Use the bolt -1- to secure the transmission to the Transmission Support - 3282- .

– Remove the last bolt.

– Press the transmission off of the engine, at the same time press the torque converter off of the engine drive plate.

– Make sure there is enough clearance around the subframe while lowering. Adjust the Transmission Support - 3282- slightly, if necessary.

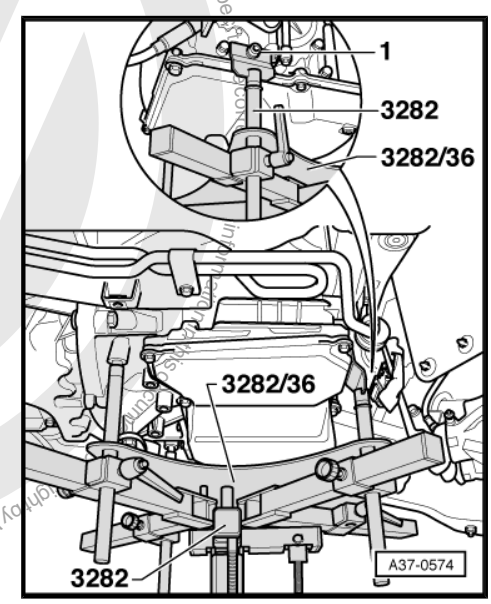

Protected by copyright. Copying for private or commercial purposes, in part or in whole, is not permitted unless authorized by Volkswagen AG. Volkswagen AG does not guarantee or accept any liability with respect to the correctness and completeness of this document.

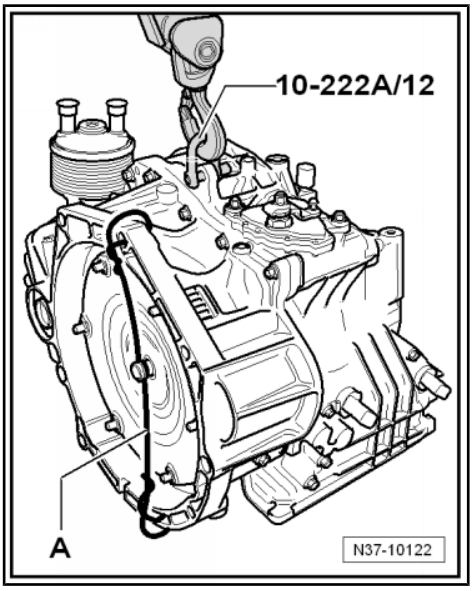

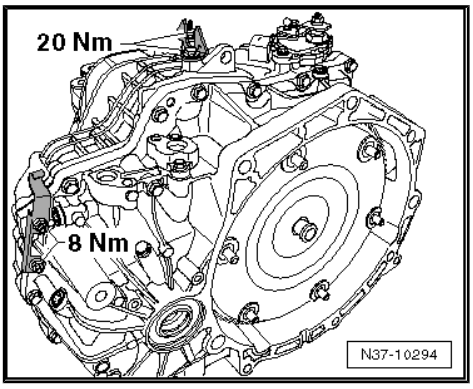

Note

- *The connector on the transmission must not be damaged when removing and installing the transmission. Replace the wiring harness in the transmission if the connector gets damaged. Refer to ⇒ "4.1 Overview - Valve Body", page 128 .*
- *Pay attention to the torque converter. It must be removed together with the transmission. Secure the torque converter with, for example a wire -A- to prevent it from falling out.*
- *Bear in mind that when installing a new transmission, the cable bracket and the selector lever cable bracket for example must be replaced.*

6.4 Transmission, Installing, Vehicles with 2.5L - 110 kW and 2.5L - 125 kW Engines

– Check that the alignment sleeves are pressed into the engine flange.

– Make sure the intermediate plate fits correctly between the engine and the transmission. The plate must contact the engine along entire perimeter when pressing lightly against engine using both hands. If it is above the engine, then it is not hooked into the cylinder block correctly.

– Make sure the torque converter is installed correctly. Refer to ⇒ "1.1 Torque Converter, Removing and Installing", page 10 .

Further installation is performed in the reverse order of the removal.

The engine and the transmission must be mounted in the subframe mount without tension. Refer to ⇒ Rep. Gr. 10 ; Engine, Removing and Installing for the procedure description.

– Replace all the bolts from the left subframe mount.

– Install all new bolts first by hand.

Protected by copyright. Copying for private or commercial purposes, in part or in whole, is not permitted unless authorised by Volkswagen AG. Volkswagen AG does not guarantee or accept any liability with respect to the correctness of information in this document. Copyright by Volkswagen AG.

First tighten the bolts -1- to 40 Nm +90° when installing the transmission bracket -A- on the transmission.

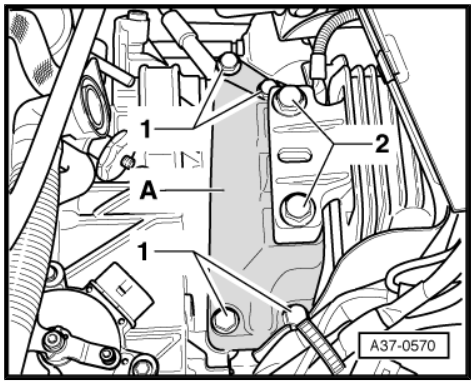

– Align the engine/transmission in its installed position. Lift until the transmission bracket is touching the transmission mount completely.

> **Caution**
>
> *There is a risk of damaging the threads in transmission bracket by inserting bolts at an angle.*
>
> ♦ *Before installing the bolts -2-, the transmission bracket and transmission mount support arm must be absolutely parallel to each other. If necessary, lift the back of the transmission using the Engine and Gearbox Jack .*

Adjust the »old fit« between both bolts using a screwdriver when tightening the transmission bracket to the transmission mount bolts -2-. Tighten the two larger bolts to 60 Nm +90°.

Transmission to engine tightening specifications. Refer to ⇒ “6.5 Tightening Specifications, Transmission to Engine”, page 71 .

– Install the pendulum support. Refer to ⇒ Suspension, Wheels, Steering; Rep. Gr. 40 ; Subframe; Overview - Subframe .

– Attach the drive axles to the transmission. Refer to ⇒ Suspension, Wheels, Steering; Rep. Gr. 40 ; Drive Axles, Removing and Installing .

– Align the exhaust system free of tension. Refer to ⇒ Rep. Gr. 26 ; Exhaust System; Exhaust System, Installing without Tension or ⇒ Rep. Gr. 26 ; Exhaust Pipes/Mufflers; Exhaust System, Installing without Tension .

– Install the starter. Refer to ⇒ Electrical Equipment; Rep. Gr. 27 ; Starter; Starter, Removing and Installing .

– Connect the coolant hoses to the ATF cooler and check the coolant level. Refer to ⇒ Rep. Gr. 19 .

– Attach the selector lever cable to the transmission and adjust it. Refer to ⇒ “4.5 Selector Lever Cable, Adjusting”, page 38 .

– Install the battery tray and the battery. Refer to ⇒ Electrical Equipment; Rep. Gr. 27 ; Battery; Battery, Removing and Installing .

– Check the ATF level after installing. Refer to ⇒ “11 ATF Level, Checking and Filling”, page 112 .

– Install the noise insulation. Refer to ⇒ Body Exterior; Rep. Gr. 50 ; Noise Insulation .

– Install the wheels. Refer to ⇒ Suspension, Wheels, Steering; Rep. Gr. 44 ; Wheel Installation Tightening Specifications .

– Perform a basic setting. Connect the Vehicle Diagnostic Tester and then select “Perform basic setting” under `Guided Functions`.

Tightening Specifications

Transmission to engine tightening specifications. Refer to ⇒ “6.5.2 Tightening Specifications, Vehicles with 2.5L - 110 kW and 2.5L -125 kW Engines”, page 73 .

Component	Nm
Drive plate to torque converter	60

Protected by copyright. Copyright by Volkswagen AG. Copyright by Volkswagen AG does not guarantee or accept any liability with respect to the correctness of information in this document. Copying for private or commercial purposes, in part or in whole, is not permitted unless authorized by Volkswagen AG.

Component	Nm
Selector cable bracket to transmission	8
Cable bracket to transmission	20

6.5 Tightening Specifications, Transmission to Engine

⇒ "6.5.1 Tightening Specifications, Vehicles with 2.0L - 85kW and 2.0L - 110kW Engines", page 71 .

⇒ "6.5.2 Tightening Specifications, Vehicles with 2.5L - 110 kW and 2.5L -125 kW Engines", page 73 .

6.5.1 Tightening Specifications, Vehicles with 2.0L - 85kW and 2.0L - 110kW Engines

Note

- *The -arrows- point to the alignment sleeves in the engine.*
- *When removing and installing pay attention to the different bolt lengths.*
- *If necessary the bolt length may differ from the illustration.*

Protected by copyright. Copying for private or commercial purposes, in part or in whole, is not permitted unless authorised by Volkswagen AG. Volkswagen AG does not guarantee or accept any liability with respect to the correctness of information in this document. Copyright by Volkswagen AG.

1 - Direction of Travel

A - Bolt for 2.0L 110 kW FSI Engine

B - Bolt for 1.6L 75 kW Engine

M12 - 80 Nm

- ❑ When using the Insert Tool - 18 mm - T10179- : 65 Nm.

M10 - 40 Nm

- ❑ These bolts are located inside the lower flange

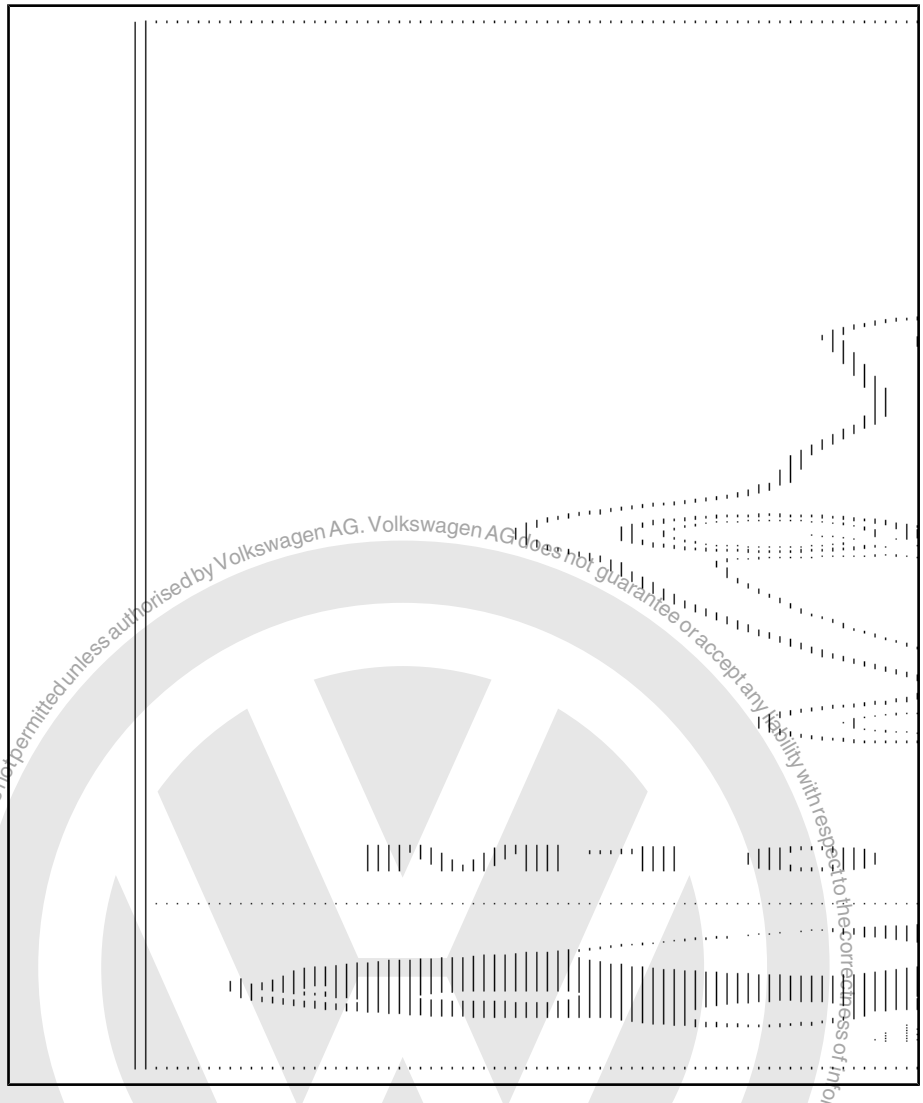

Protected by copyright. Copying for private or commercial purposes, in part or in whole, is not permitted unless authorised by Volkswagen AG. Volkswagen AG does not guarantee or accept any liability with respect to the correctness of information in this document. Copyright by Volkswagen AG.

6.5.2 Tightening Specifications, Vehicles with 2.5L - 110 kW and 2.5L -125 kW Engines

Note

- *The -arrows- point to the alignment sleeves in the engine.*
- *When removing and installing pay attention to the different bolt lengths.*
- *If necessary the bolt length may differ from the illustration.*

1 - Direction of Travel

M12 - 80 Nm

- When using the Insert Tool - 18 mm - T10179- : 65 Nm.

M10 - 40 Nm

- These bolts are located inside the lower flange

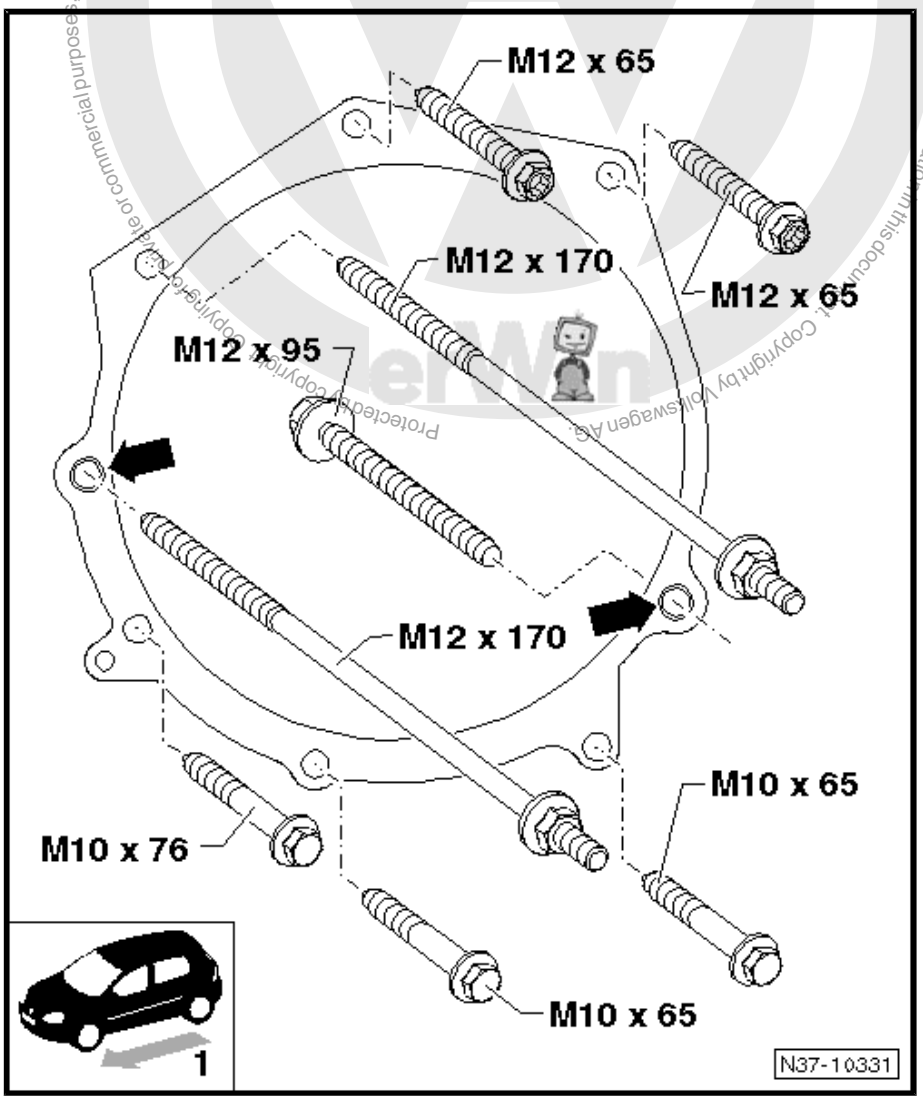

7 Transmission, Removing and Installing, Jetta from MY 2011

⇒ “7.2 Transmission, Removing, Jetta MY 2011, 2.0L 85 kW”, page 82 .

⇒ “7.3 Transmission, Removing, Jetta MY 2011, 2.5L 125 kW”, page 91 .

⇒ “7.4 Transmission, Installing, Jetta MY 2011”, page 100 .

⇒ “7.5 Tightening Specifications, Transmission to Engine”, page 102 .

7.1 Transmission, Removing, Jetta MY 2011 1.6L 77 kW

– Before removing, print out the diagnostic protocol for this vehicle »if possible«. Affix the protocol on to transmission before sending back the removed transmission in the usual way.

Special tools and workshop equipment required

- Engine and Gearbox Jack - VAS6931-
- Socket - Sw15 - V/175-
- Transmission Support - 3282-
- Drive Axle Wedge Tool - T10161-
- Torque Wrench 1332 40-200Nm - VAG1332-
- Transmission Support - Mounting Plate 36 - 3282/36-

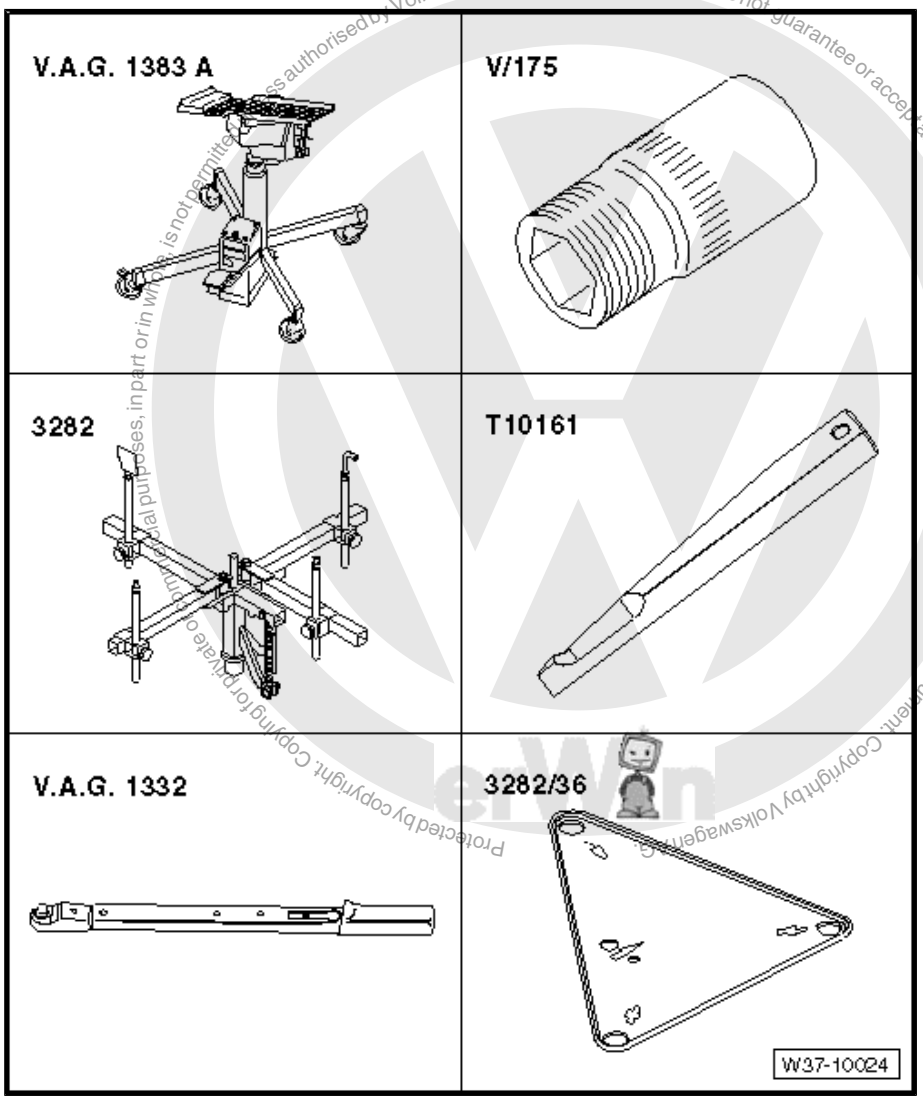

Protected by copyright. Copyright for private or commercial purposes, in part or in whole, is not permitted unless authorised by Volkswagen AG. Volkswagen AG does not guarantee or accept any liability with respect to the correctness of information in this document. Copyright by Volkswagen AG.

- Engine Support Bridge - 10-222A-

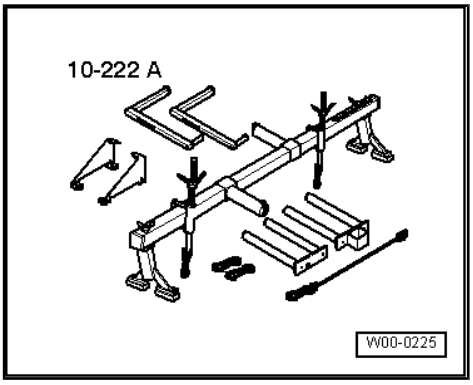

- Hose Clamps - Up To 25mm - 3094-

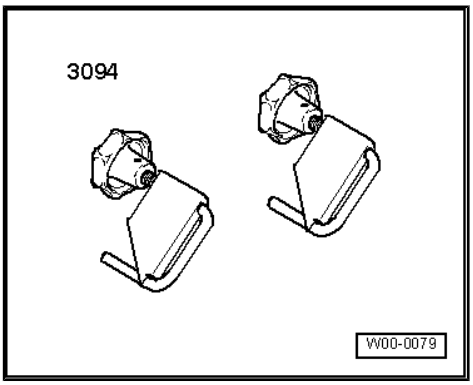

- Tensioning Strap - T10038-

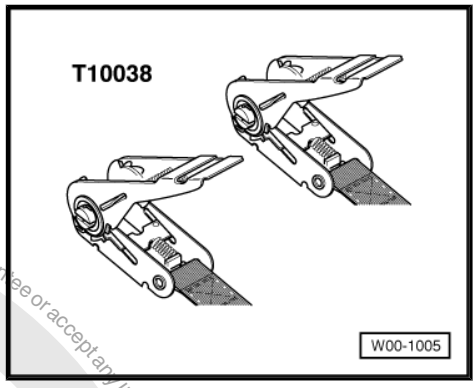

- Engine Support - Basic Set - T40091-

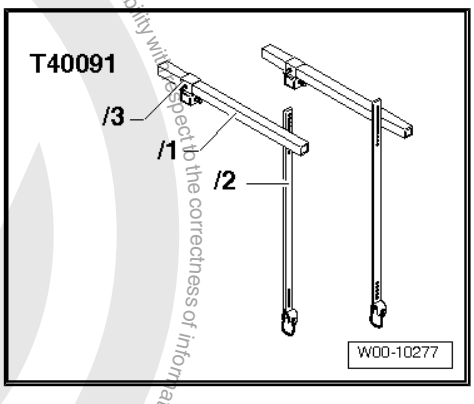

Protected by copyright. Copying for private or commercial purposes, in part or in whole, is not permitted unless authorised by Volkswagen AG. Volkswagen AG does not guarantee or accept any liability with respect to the correctness of information in this document. Copyright by Volkswagen AG.

Removing

– Move the selector lever into »P«.

– See if a coded radio is installed. If so, obtain the anti-theft code.

– Disconnect the battery ground cable. Refer to ⇒ Electrical Equipment; Rep. Gr. 27 ; Battery; Battery, Disconnecting and Connecting .

Protected by copyright. Copying for private or commercial purposes, in part or in whole, is not permitted unless authorised by Volkswagen AG. Volkswagen AG does not guarantee or accept any

– Remove the air filter. Refer to ⇒ Rep. Gr. 24 ; Air Filter; Air Filter Housing, Removing and Installing .

– Remove the battery and the battery tray. Refer to ⇒ Electrical Equipment; Rep. Gr. 27 ; Battery; Battery, Removing and Installing .

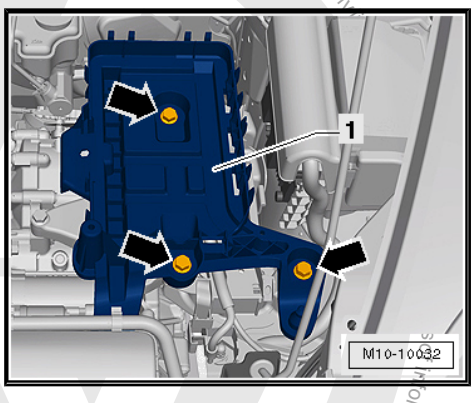

– To remove the selector lever cable from the transmission, release the selector lever cable -arrows 1- and then remove it from the cable bracket -arrow 2-.

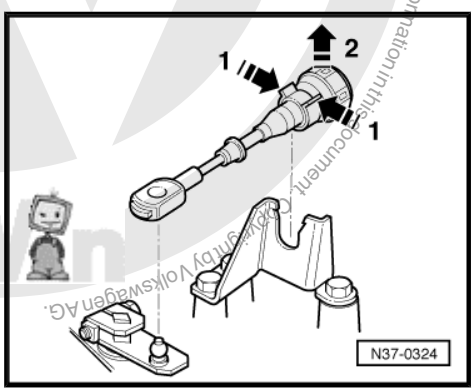

Note

- *Do not use pliers because the mounting tabs on the cable bracket could break off.*
- *Do not bend or kink the selector lever cable.*

– Pry the selector lever cable -1- off the selector shaft lever -3- using for example an open end wrench -2-.

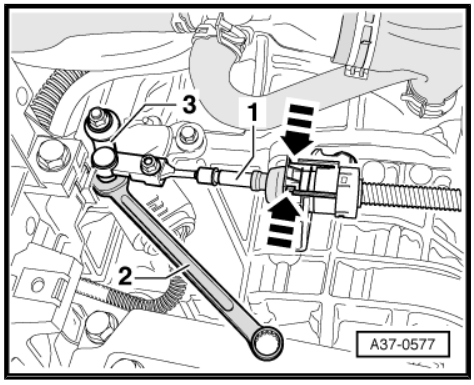

– Mount the Hose Clamps - Up To 25mm - 3094- on the hoses and remove the hoses form the ATF cooler.

– Disconnect the connections from the transmission and starter.

- Multifunction Transmission Range Switch
- Starter

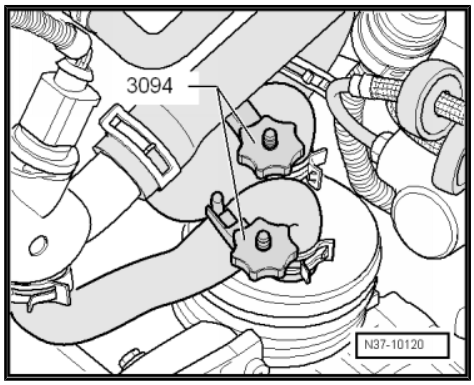

– Remove the upper bolts -1 through 3- between the engine and the transmission.

– Remove the plenum chamber cover. Refer to ⇒ Body Exterior; Rep. Gr. 50 ; Plenum Chamber Cover; Plenum Chamber Cover, Removing and Installing .

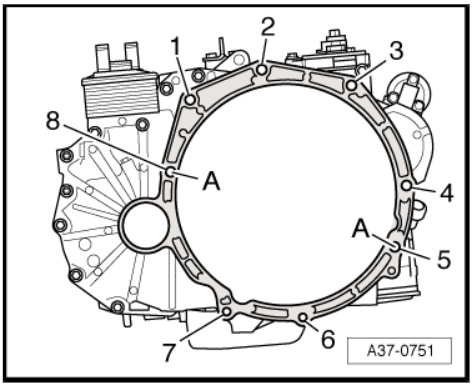

– Remove the bolts -arrows- for the left and right lock carrier retaining brackets.

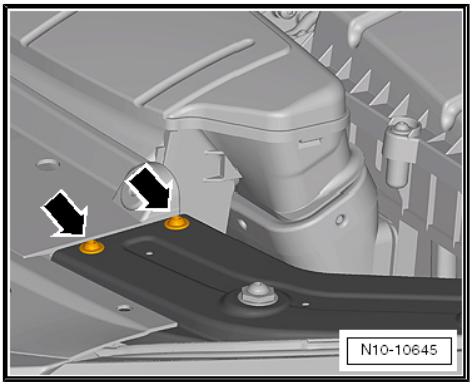

– Remove the lower mounts on the Engine Support Bridge - Engine Support 28 - 10-222A/28- and replace with the Engine Support Bridge - Engine Support 28-2 - 10-222A/28-2- .

– Remove the bolts -arrows- for securing the engine support bridge on the lock carrier from the Engine Support Bridge - Engine Support 28-2 - 10-222A/28-2- .

• Use the bolts in the Engine Support Bridge - Engine Support 28-2 - 10-222A/28-2- for attaching the Engine Support Bridge - Engine Support 28 - 10-222A/28- . Not the bolts for the retaining bracket.

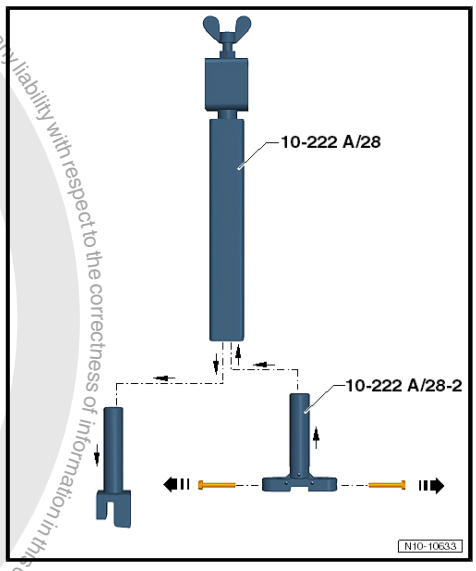

– Install the Engine Support Bridge - Engine Support 28 - 10-222A/28- and tighten the bolts to 8 Nm -arrows-.

Caution

A second technician is needed to mount the Engine Support Bridge - 10-222A- on the vehicle to prevent the Engine Support Bridge - 10-222A- from tipping.

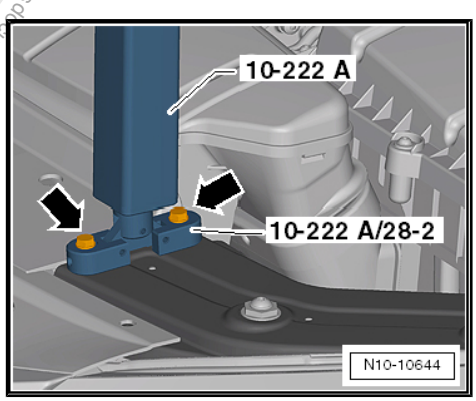

– If there are hose and cable connections located near the engine lifting eyes for the Engine Support Bridge - 10-222A- , these must now be removed.

– Install the Engine Support Bridge - 10-222A- as shown.

Copyright by Volkswagen AG. Volkswagen AG does not guarantee or accept any liability with respect to the correctness of information in this document. Copyright by Volkswagen. Copying for private or commercial purposes, in part or in whole, is not permitted unless authorised by Volkswagen AG.

– First slide the Moveable Joints -item 2- onto the Square Pipe from the Engine Support Bridge - 10-222A- .

– Mount the Engine Support Bridge - 10-222A- on the suspension strut towers and have a second technician hold it to prevent it from tipping.

– Push the Engine Support - Basic Set - Square Pipe - T40091/1- -item 5- from the front left and right through the Engine Support Bridge - Engine Support 28 - 10-222A/28- -item 6- and place on each side of the Engine Support - Supplement Kit - Movable Joint - T40093/4- -item 4-.

– Push the Engine Support - Basic Set - Rail with Holes - T40091/2- -item 7- with the Engine Support - Supplement Kit - Mount - T40093/5- -item 8- in the Engine Support - Supplement Kit - Movable Joint - T40093/4- -item 4-.

– Install the locking pins into the Engine Support - Basic Set - Rail with Holes - T40091/2- -item 7- and secure it with the cotter pins.

1 - Engine Support Bridge - Engine Support 31 - Adapter 2 - 10-222A/31-2-

2 - Engine Support - Basic Set - Moveable Joint - T40091/3-

3 - Engine Support Bridge - Engine Support 31 - Adapter 1 - 10-222A/31-1-

4 - Engine Support - Supplement Kit - Movable Joint - T40093/4-

5 - Engine Support - Basic Set - Square Pipe - T40091/1-

6 - Engine Support Bridge - Engine Support 28 - 10-222A/28- with Engine Support Bridge - Engine Support 28-2 - 10-222A/28-2-

7 - Engine Support - Basic Set - Rail with Holes - T40091/2-

8 - Engine Support - Supplement Kit - Mount 5 - T40093/5-

9 - Engine Support Bridge - Spindle - 10-222A/11-

❑ Engaged in the engine lifting eye -arrow-.

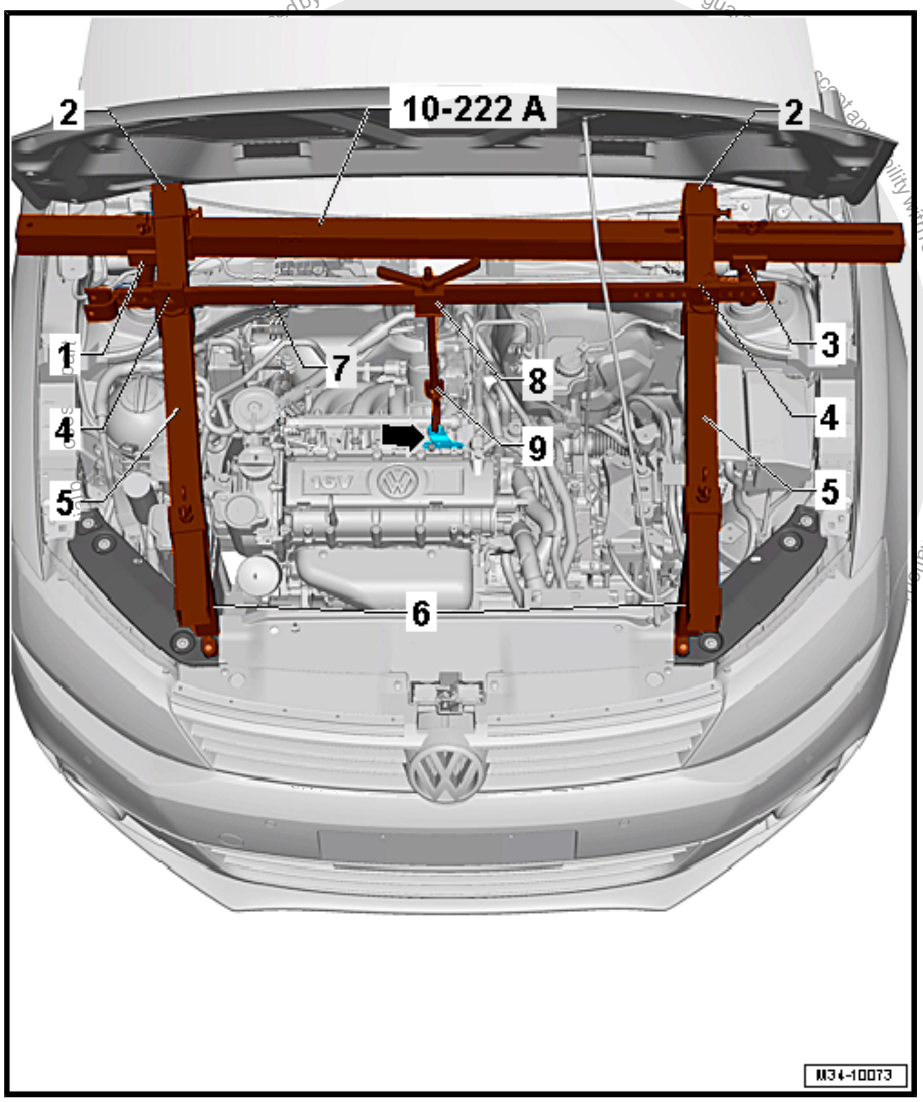

– Tighten all the threaded connections on the Engine Support Bridge - 10-222A- hand-tight. While doing so, adjust the height of the Engine Support Bridge - 10-222A- parallel over the Engine Support Bridge - Engine Support 28 - 10-222A/28- .

– Lightly tension the engine/transmission assembly via the Engine Support Bridge - 10-222A- spindle, do not lift.

The left driveshaft must be removed later in the procedure.

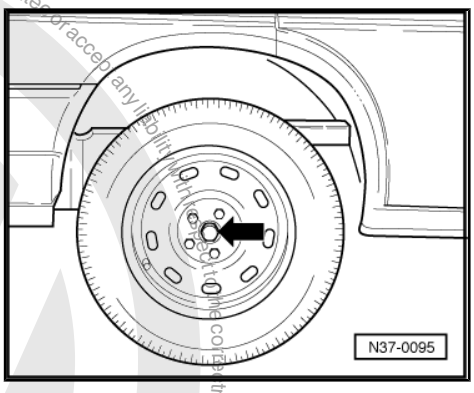

– With the vehicle still standing on its wheels, loosen the left front collar bolt -arrow- a maximum 90°, otherwise the wheel bearing will get damaged. Refer to ⇒ Suspension, Wheels, Steering; Rep. Gr. 40 ; Drive Axles, Removing and Installing .

– Raise the vehicle and remove the front wheels.

– Remove the noise insulation. Refer to ⇒ Body Exterior; Rep. Gr. 50 ; Noise Insulation .

– Remove the left front housing liner. Refer to ⇒ Body Exterior; Rep. Gr. 66 ; Wheel Housing Liner; Front Wheel Housing Liner, Removing and Installing .

Caution

Risk of damaging the decoupling element.

- *Do not bend the decoupling element more than 10°.*
- *Do not load the decoupling element.*
- *Do not damage the wire mesh on the decoupling element.*

– Remove the front exhaust pipe from the engine and lay on the subframe. Refer to ⇒ Rep. Gr. 26 .

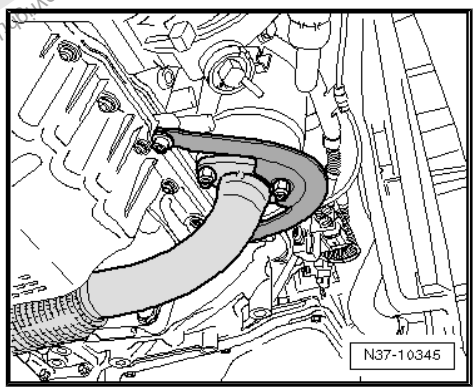

– Remove the bolts -arrows- for the cover plate -1- from the transmission housing, and remove the cover plate.

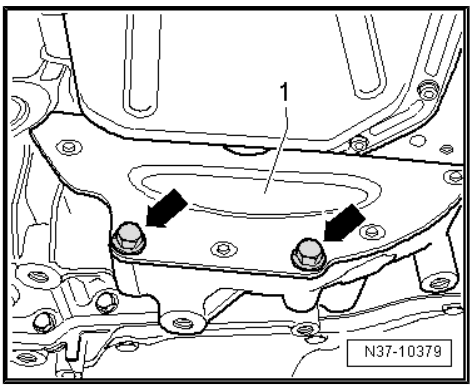

Protected by copyright. Copying for private or commercial purposes, in part or in whole, is not permitted unless authorised by Volkswagen AG. Volkswagen AG does not guarantee or accept any liability with respect to the correctness of information in this document. Copyright by Volkswagen AG.

– Remove the six converter nuts -arrow- for example with the Socket - Sw15 - V/175- .

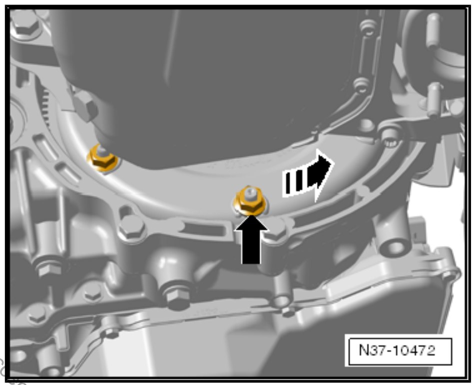

Note

When doing so carefully rotate the engine further!

Vehicles with power steering

– Remove the brackets and the power steering lines from the transmission.

Continuation for all vehicles

– Disconnect the connectors -1- and -2- from the transmission.

– Remove the starter. Refer to ⇒ Electrical Equipment; Rep. Gr. 27 ; Starter; Starter, Removing and Installing .

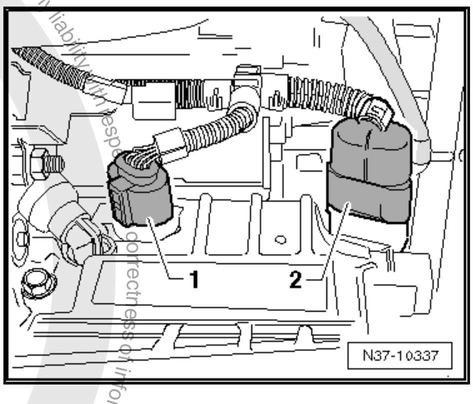

– Remove the pendulum support: First bolt -A- then bolts -B-.

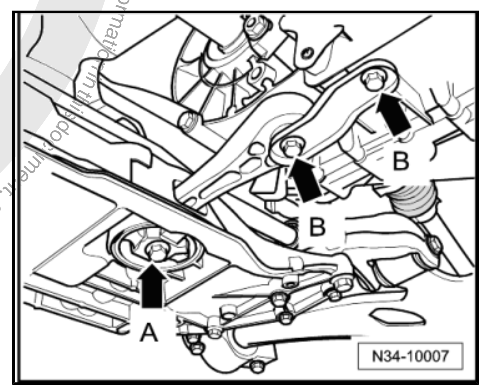

Note

When installing, first tighten bolts -B-, and then the bolts -A-. Refer to ⇒ Suspension, Wheels, Steering; Rep. Gr. 40 ; Subframe; Overview - Subframe for the tightening specifications.

– Remove the control arms from the wheel bearing housing on both sides -arrows-.

Refer to ⇒ Suspension, Wheels, Steering; Rep. Gr. 40 ; Front Suspension and Control Arm; Overview - Front Suspension and Control Arm for the tightening specifications.

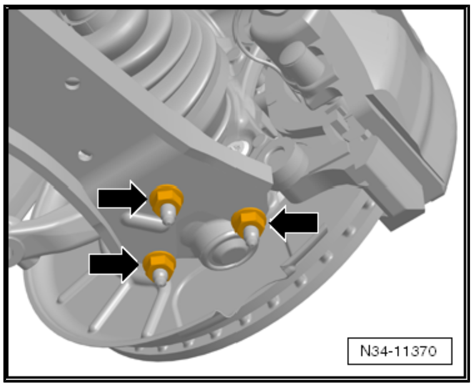

– Remove both drive axles from the transmission. Refer to ⇒ Suspension, Wheels, Steering; Rep. Gr. 40 ; Drive Axles, Removing and Installing .

– Remove the left drive axle. Refer to ⇒ Suspension, Wheels, Steering; Rep. Gr. 40 ; Drive Axles, Removing and Installing .

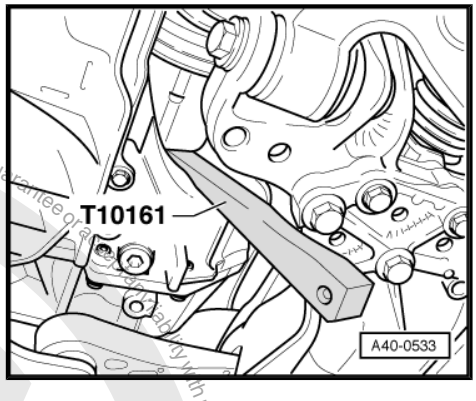

– Lift the right driveshaft as far as possible and then tie it up.

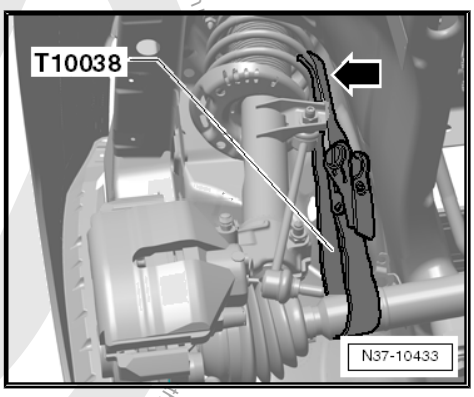

– Remove the transmission mount bolts -2- to the transmission bracket -A- and remove the transmission bracket bolts -1- to the transmission.

– Remove the transmission bracket -A-. To do this slightly lower the engine with the transmission using the Engine Support Bridge - 10-222A- spindle.

Four turns are sufficient.

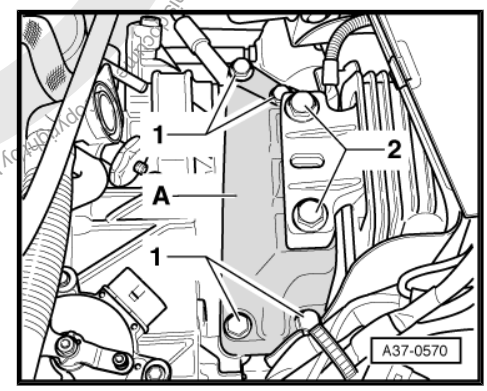

– Remove the connecting bolt -8- from between the engine and the transmission.

– Leave the connecting bolt -5- for safety.

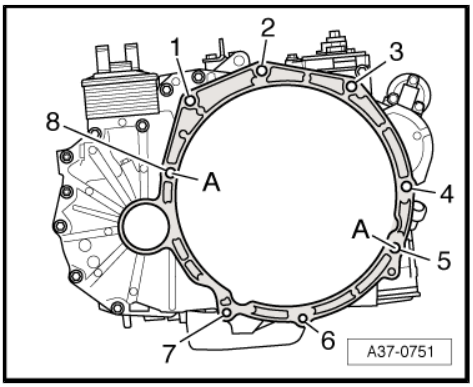

Protected by copyright. Copying for private or commercial purposes, in part or in whole is not permitted unless authorised by Volkswagen AG. Volkswagen AG does not guarantee or accept any liability with respect to the correctness and completeness of this document.

- Before removing the last connecting bolt, support the transmission with the Engine and Gearbox Jack - VAS6931- , the Transmission Support - 3282- and the Transmission Support - Mounting Plate 36 - 3282/36- .

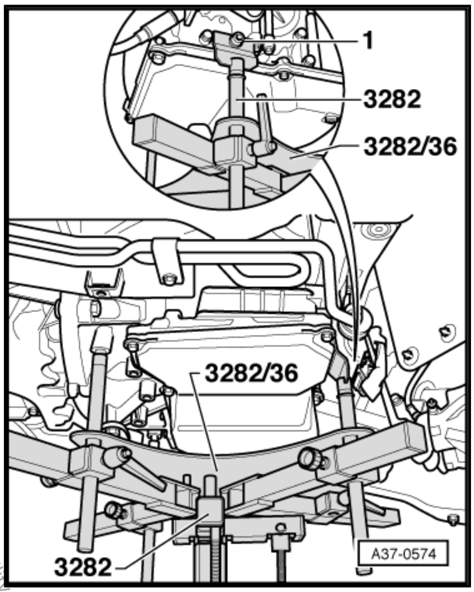

- Secure the transmission to the Transmission Support - 3282- using the nut -1- on the double bolt.
- Remove the last connecting bolt.
- Press the transmission off of the engine, at the same time press the torque converter off of the engine drive plate.
- Guide the transmission past the power steering line, if installed, and past the subframe when lowering it. Adjust the Transmission Support - 3282- slightly, if necessary.

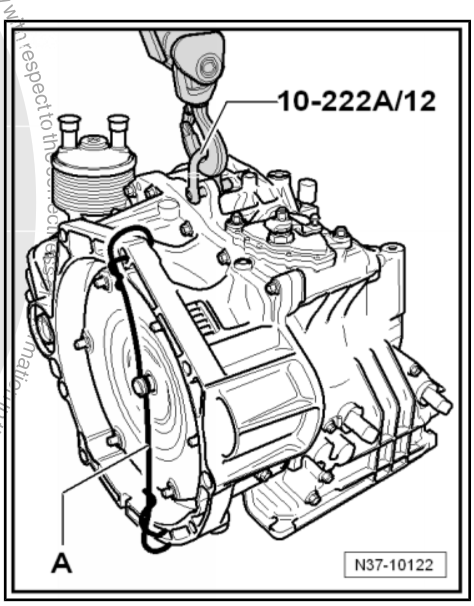

Protected by copyright. Copying for private or commercial purposes, in part or in whole, is not permitted unless authorised by Volkswagen AG. Volkswagen AG does not guarantee or accept any liability with respect to the correctness of information in this document. Copyright by Volkswagen AG.

Note

- *The connector on the transmission must not be damaged when removing and installing the transmission. Replace the wiring harness in the transmission if the connector gets damaged. Refer to* *⇒ "4.1 Overview - Valve Body", page 128* .
- *Pay attention to the torque converter. It must be removed together with the transmission. Secure the torque converter with, for example a wire -A- to prevent it from falling out.*
- *Bear in mind that when installing a new transmission, the cable bracket and the selector lever cable bracket for example must be replaced.*

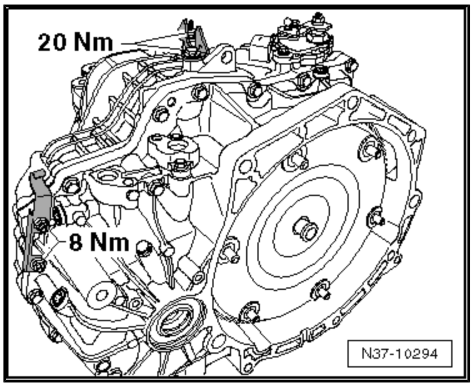

7.2 Transmission, Removing, Jetta MY 2011, 2.0L 85 kW

- Before removing, print out the diagnostic protocol for this vehicle »if possible«. Affix the protocol on to transmission before sending back the removed transmission in the usual way.

Special tools and workshop equipment required

- Engine and Gearbox Jack - VAS6931-
- Socket - Sw15 - V/175-
- Transmission Support - 3282-
- Drive Axle Wedge Tool - T10161-
- Torque Wrench 1332 40-200Nm - VAG1332-
- Transmission Support - Mounting Plate 36 - 3282/36-
- Engine Support Bridge - 10-222A-
- Hose Clamps - Up To 25mm - 3094-
- Tensioning Strap - T10038-
- Engine Support - Basic Set - T40091-

Removing

– Move the selector lever into »P«.

– See if a coded radio is installed. If so, obtain the anti-theft code.

– Disconnect the battery ground cable. Refer to ⇒ Electrical Equipment; Rep. Gr. 27 ; Battery; Battery, Disconnecting and Connecting .

– Remove the air filter. Refer to ⇒ Rep. Gr. 24 ; Air Filter; Air Filter Housing, Removing and Installing .

– Remove the battery and the battery tray. Refer to ⇒ Electrical Equipment; Rep. Gr. 27 ; Battery; Battery, Removing and Installing .

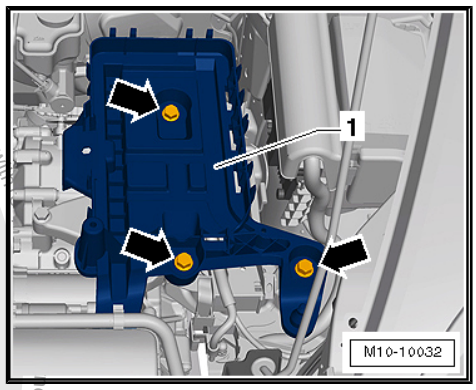

– To remove the selector lever cable from the transmission, release the selector lever cable -arrows 1- and then remove it from the cable bracket -arrow 2-.

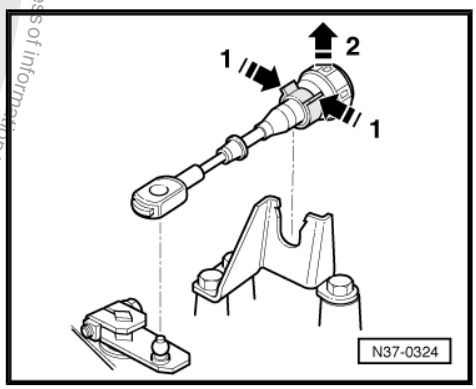

Note

- *Do not use pliers because the mounting tabs on the cable bracket could break off.*
- *Do not bend or kink the selector lever cable.*

Protected by copyright. Copyright by Volkswagen AG.

– Pry the selector lever cable -1- off the selector shaft lever -3- using for example an open end wrench -2-.

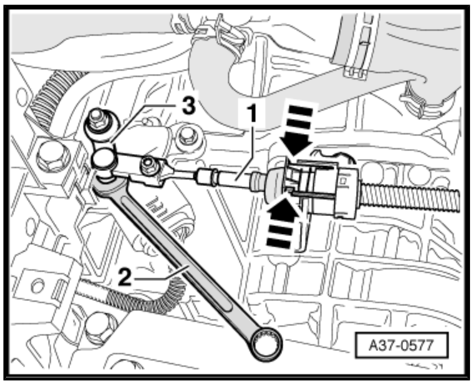

– Mount the Hose Clamps - Up To 25mm - 3094- on the hoses and remove the hoses form the ATF cooler.

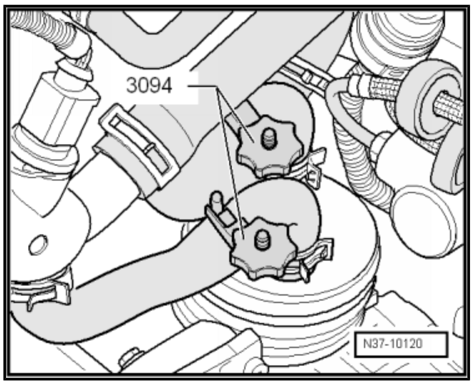

– Disconnect the connections from the transmission and starter.

◆ Multifunction transmission range switch

◆ Starter

– Remove the upper starter bolt.

– Remove the upper bolts between the engine and the transmission.

– Remove the plenum chamber cover. Refer to ⇒ Body Exterior; Rep. Gr. 50 ; Plenum Chamber Cover; Plenum Chamber Cover, Removing and Installing .

– Remove the bolts -arrows- for the left and right lock carrier retaining brackets.

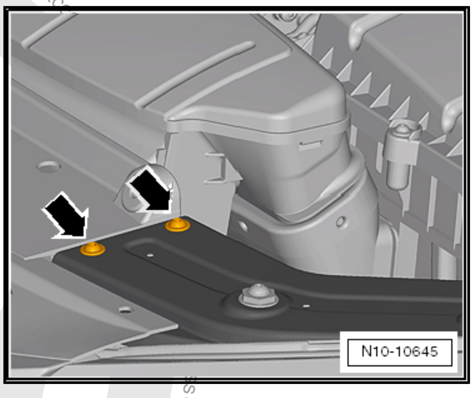

– Remove the lower mounts on the Engine Support Bridge - Engine Support 28 - 10-222A/28- and replace with the Engine Support Bridge - Engine Support 28-2 - 10-222A/28-2- .

– Remove the bolts -arrows- for securing the engine support bridge on the lock carrier from the Engine Support 28-2 - 10-222A/28-2- .

• Use the bolts in the Engine Support Bridge - Engine Support 28-2 - 10-222A/28-2- for attaching the Engine Support Bridge - Engine Support 28 - 10-222A/28- . Not the bolts for the retaining bracket.

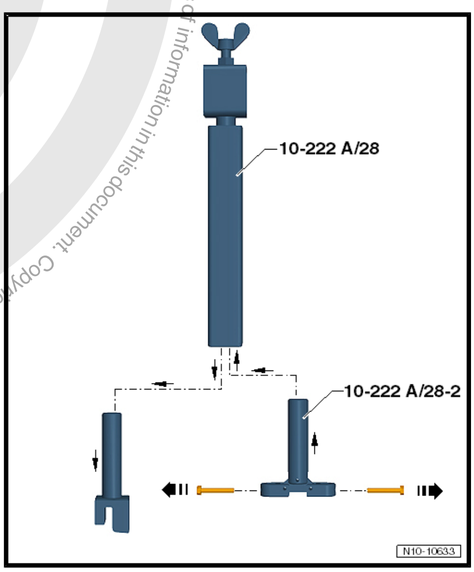

Protected by copyright. Copying for private or commercial purposes, in part or in whole, is not permitted unless authorised by Volkswagen AG. Volkswagen AG does not guarantee or accept any liability with respect to the correctness of information in this document. Copyright by Volkswagen AG.

– Install the Engine Support Bridge - Engine Support 28 - 10-222A/28- and tighten the bolts to 8 Nm -arrows-.

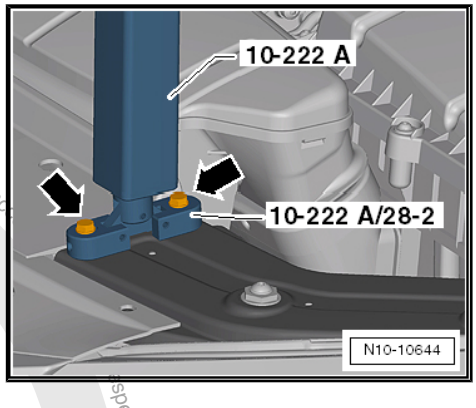

> **Caution**
>
> ***A second technician is needed to mount the Engine Support Bridge - 10-222A- on the vehicle to prevent the Engine Support Bridge - 10-222A- from tipping.***

– If there are hose and cable connections located near the engine lifting eyes for the Engine Support Bridge - 10-222A- , these must now be removed.

– Install the Engine Support Bridge - 10-222A- as shown.

– First slide the Moveable Joints -2- onto the Square Pipe from the Engine Support Bridge - 10-222A- .

– Mount the Engine Support Bridge - 10-222A- on the suspension strut towers and have a second technician hold it to prevent it from tipping.

– Push the Engine Support - Basic Set - Square Pipe - T40091/1- -5- from the front left and right through the Engine Support Bridge - Engine Support 28 - 10-222A/28- -6- and place on each side of the Engine Support - Supplement Kit - Movable Joint - T40093/4- -4-.

– Slide the Engine Support - Basic Set - Rail with Holes - T40091/2- -8- with the Engine Support - Supplement Kit Mount - T40093/5- -9- in the Engine Support - Supplement Kit - Moveable Joint - T40093/4- -4-.

– Install the locking pins into the Engine Support - Basic Set - Rail with Holes - T40091/2- -8- and secure it with the cotter pins.

Protected by copyright. Copyright by Volkswagen AG. Volkswagen AG does not guarantee or accept any liability with respect to the correctness of information in this document. Copyright by Volkswagen AG. Distribution, including to third parties, in part or in whole is not permitted unless authorised by Volkswagen AG.

1 - Engine Support Bridge - Engine Support 31 - Adapter 2 - 10-222A/31-2-

2 - Engine Support - Basic Set - Moveable Joint - T40091/3-

3 - Engine Support Bridge - Engine Support 31 - Adapter 1 - 10-222A/31-1-

4 - Engine Support - Supplement Kit - Movable Joint - T40093/4-

5 - Engine Support - Basic Set - Square Pipe - T40091/1-

6 - Engine Support Bridge - Engine Support 28 - 10-222A/28- with Engine Support Bridge - Engine Support 28-2 - 10-222A/28-2-

7 - Engine/Gearbox Support Shackle (2 pc.) - 10-222A/12-

- ❑ Engaged in the engine lifting eye.

8 - Engine Support - Basic Set - Rail with Holes - T40091/2-

9 - Engine Support - Supplement Kit - Mount 5 - T40093/5-

10 - Engine Support Bridge - Spindle - 10-222A/11-

- ❑ Engaged in the Engine/ Gearbox Support Shackle (2 pc.) - 10-222A/12- .

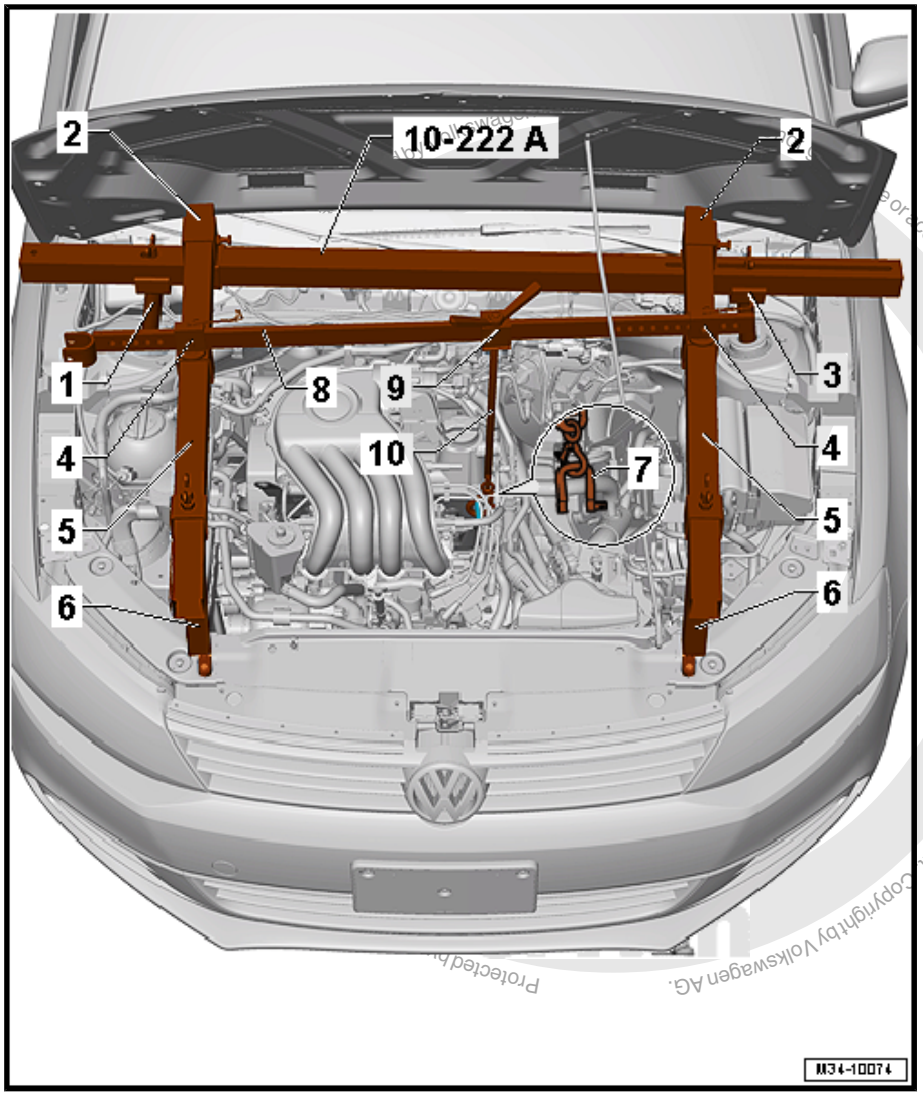

– Tighten all the threaded connections on the Engine Support Bridge - 10-222A- hand-tight. While doing so, adjust the height of the Engine Support Bridge - 10-222A- parallel over the Engine Support Bridge - Engine Support 28 - 10-222A/28- .

– Lightly tension the engine/transmission assembly via the Engine Support Bridge - 10-222A- spindle, do not lift.

– Remove the upper engine/transmission connecting bolts.

Protected by Copyright by Volkswagen AG. We do not accept any liability with respect to the correctness of information in this document.

The left drive axle must be removed later in the procedure.

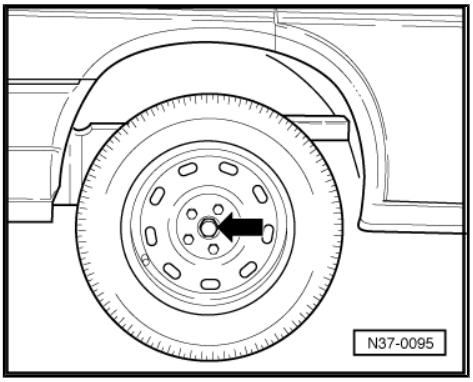

– With the vehicle still standing on its wheels, loosen the left front collar bolt -arrow- a maximum 90°, otherwise the wheel bearing will get damaged. Refer to ⇒ Suspension, Wheels, Steering; Rep. Gr. 40 ; Drive Axles, Removing and Installing .
– Raise the vehicle and remove the front wheels.
– Remove the noise insulation. Refer to ⇒ Body Exterior; Rep. Gr. 50 ; Noise Insulation .
– Remove the left front housing liner. Refer to ⇒ Body Exterior; Rep. Gr. 66 ; Wheel Housing Liner; Front Wheel Housing Liner, Removing and Installing .

Vehicles with Power Steering

– Remove the brackets and the power steering lines from the transmission.

Continuation for All Vehicles

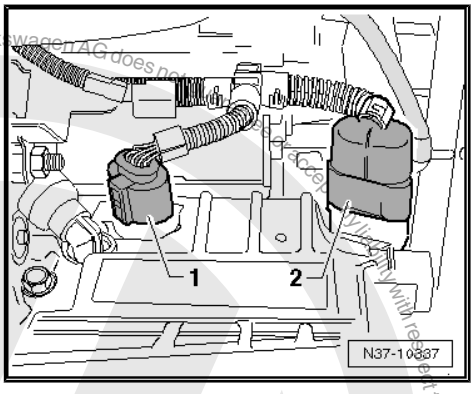

– Disconnect the connectors -1 and 2- from the transmission.
– Remove the starter. Refer to ⇒ Electrical Equipment; Rep. Gr. 27 ; Starter; Starter, Removing and Installing .

Caution

Risk of damaging the decoupling element.

- *Do not bend the decoupling element more than 10°.*
- *Do not load the decoupling element.*
- *Do not damage the wire mesh on the decoupling element.*

– Separate the exhaust system at the double clamp and remove the exhaust pipe bracket from the subframe. Refer to ⇒ Rep. Gr. 26 .

– Remove the pendulum support: First bolt -A- then bolts -B-.

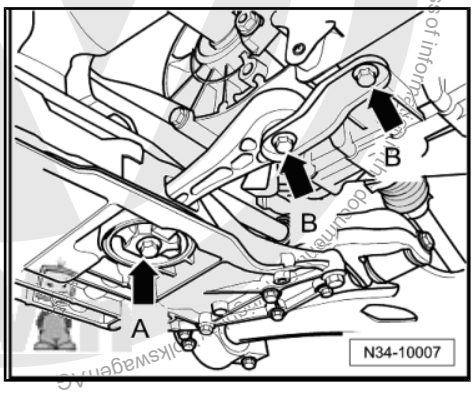

Note

When installing, first tighten bolts -B-, and then the bolts -A-. Refer to ⇒ Suspension, Wheels, Steering; Rep. Gr. 40 ; Subframe; Overview - Subframe for the tightening specifications.

Protected by copyright. Copying for private or commercial purposes, in part or in whole, is not permitted unless authorised by Volkswagen AG. Volkswagen AG does not guarantee or accept any liability with respect to the correctness of information in this document.

– Remove the control arms from the wheel bearing housing on both sides.

Refer to ⇒ Suspension, Wheels, Steering; Rep. Gr. 40 ; Front Suspension and Control Arm; Overview - Front Suspension and Control Arm for the tightening specifications.

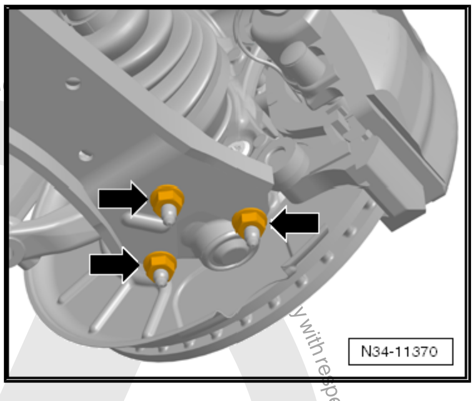

– If equipped, remove the heat shield above the right drive axle -arrows-.

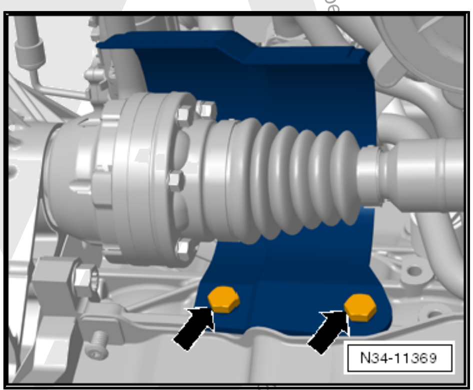

– Remove both drive axles from the transmission. Refer to ⇒ Suspension, Wheels, Steering; Rep. Gr. 40 ; Drive Axles, Removing and Installing .

– Remove the left drive axle. Refer to ⇒ Suspension, Wheels, Steering; Rep. Gr. 40 ; Drive Axles, Removing and Installing .

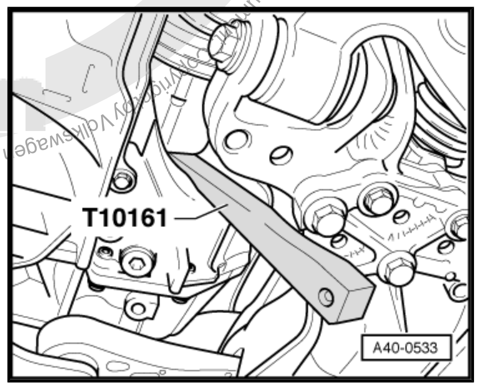

– Lift the right drive axle as far as possible and then tie it up.

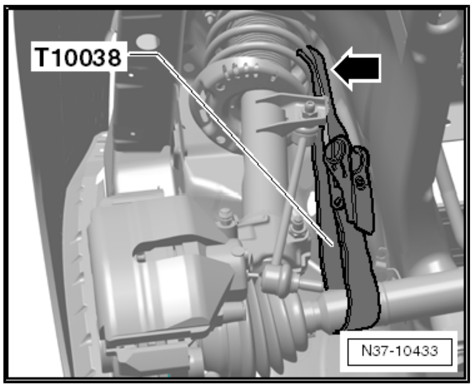

– Remove the ground cable from the transmission bracket -A-, if equipped.

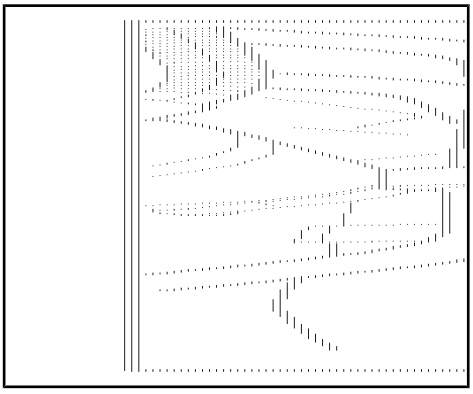

– Remove the transmission mount bolts -2- to the transmission bracket -A- and remove the transmission bracket bolts -1- to the transmission.

– Remove the transmission bracket -A-. To do this slightly lower the engine with the transmission using the Engine Support Bridge - 10-222A- spindle.

Four turns are sufficient.

– Remove the lower connecting bolts between the engine and the transmission.

– For safety, leave one bolt installed that is easily accessible.

The hole for the converter bolts on the back of the engine is covered with a rubber plug.

– Remove this plug.

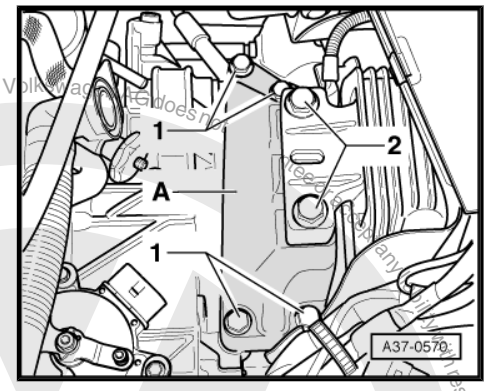

– Remove the six converter nuts -arrow- with the Socket - Sw15 - V/175- .

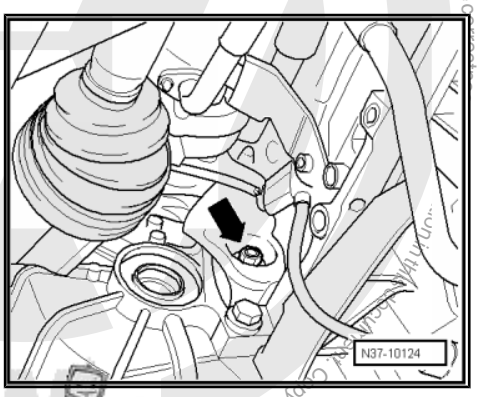

Note

Carefully rotate the engine further!

Protected by copyright. Copying for private or commercial purposes, in part or in whole, is not permitted unless authorised by Volkswagen AG. Volkswagen AG does not guarantee or accept any liability with respect to the correctness and completeness of this document. Copyright by Volkswagen AG.

Protected by copyright. Copying for private or commercial purposes, in part or in whole, is not permitted unless authorised by Volkswagen AG. Volkswagen AG does not guarantee or accept any liability with respect to the correctness of information in this document. Copyright by Volkswagen AG.

– Before removing the last connecting bolt, support the transmission with the Engine and Gearbox Jack - VAS6931- , the Transmission Support - 3282- and the Transmission Support - Mounting Plate 36 - 3282/36- .

– Secure the transmission to the Transmission Support - 3282- using the nut -1- on the double bolt.

– Remove the last bolt.

– Press the transmission off of the engine, at the same time press the torque converter off of the engine drive plate.

– Guide the transmission past the power steering line, if installed, and past the subframe when lowering it. Adjust the Transmission Support - 3282- slightly, if necessary.

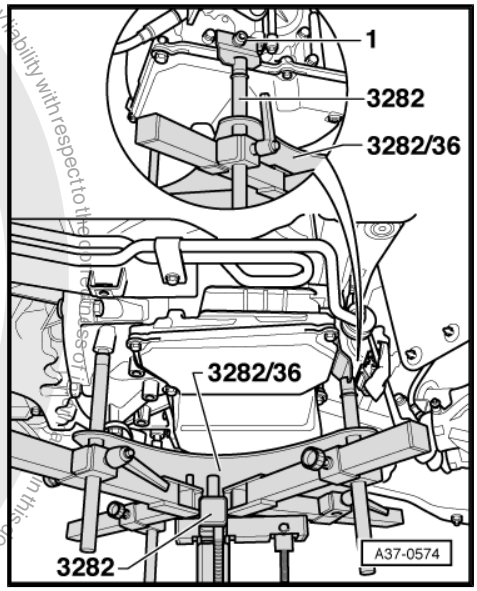

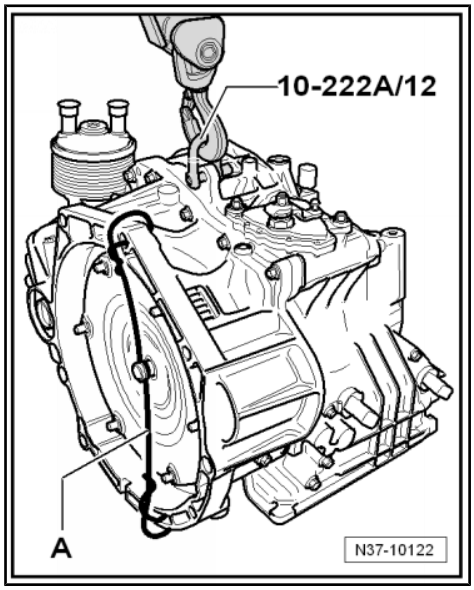

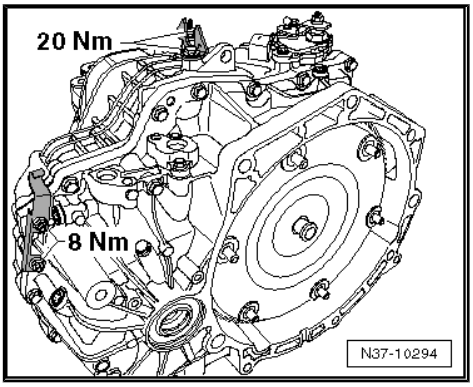

Note

- *The connector on the transmission must not be damaged when removing and installing the transmission. Replace the wiring harness in the transmission if the connector gets damaged. Refer to ⇒ "4.1 Overview - Valve Body", page 128 .*
- *Pay attention to the torque converter. It must be removed together with the transmission. Secure the torque converter with, for example a wire -A- to prevent it from falling out.*
- *Bear in mind that when installing a new transmission, the cable bracket and the selector lever cable bracket for example must be replaced.*

Note

- *If the needle bearing in the crankshaft is damaged, the gears will no longer shift correctly.*
- *If it is not damaged, coat it lightly with High Temperature Grease . Refer to the Parts Catalog.*
- *Grease the transmission driveshaft pins (not the splines) lightly.*

7.3 Transmission, Removing, Jetta MY 2011, 2.5L 125 kW

– Before removing, print out the diagnostic protocol for this vehicle »if possible«. Affix the protocol on to transmission before sending back the removed transmission in the usual way.

Special tools and workshop equipment required

- Engine and Gearbox Jack - VAS6931-
- Socket - Sw15 - V/175-
- Transmission Support - 3282-
- Drive Axle Wedge Tool - T10161-
- Torque Wrench 1332 40-200Nm - VAG1332-
- Transmission Support - Mounting Plate 36 - 3282/36-
- Engine Support Bridge - 10-222A-
- Hose Clamps - Up To 25mm - 3094-
- Tensioning Strap - T10038-
- Engine Support - Basic Set - T40091-

Removing

– Move the selector lever into »P«.

– See if a coded radio is installed. If so, obtain the anti-theft code.

– Disconnect the battery ground cable. Refer to ⇒ Electrical Equipment; Rep. Gr. 27 ; Battery; Battery, Disconnecting and Connecting .

– Remove the engine cover with the air filter. Refer to ⇒ Rep. Gr. 24 ; Air Filter; Air Filter Housing, Removing and Installing .

Protected by copyright. Copying for private or commercial purposes, in part or in whole, is not permitted unless authorised by Volkswagen AG. Volkswagen AG does not guarantee or accept any liability with respect to the correctness of information in this document. Copyright by Volkswagen AG.

– Disconnect the hoses -arrows- and remove the intake hose from the throttle valve.

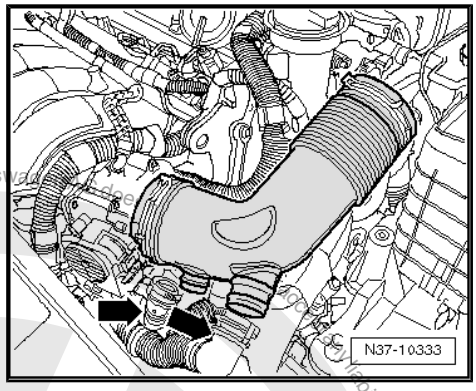

– Remove the battery and the battery tray. Refer to ⇒ Electrical Equipment; Rep. Gr. 27 ; Battery; Battery, Removing and Installing .

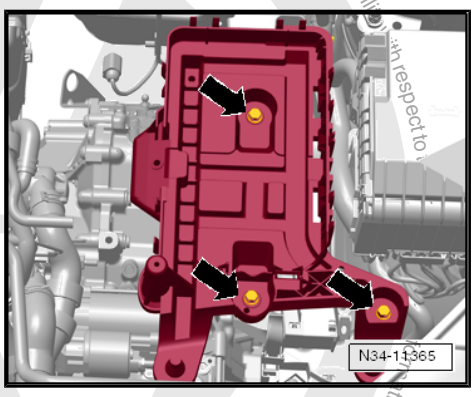

– To remove the selector lever cable from the transmission, release the selector lever cable -arrows 1- and then remove it from the cable bracket -arrow 2-.

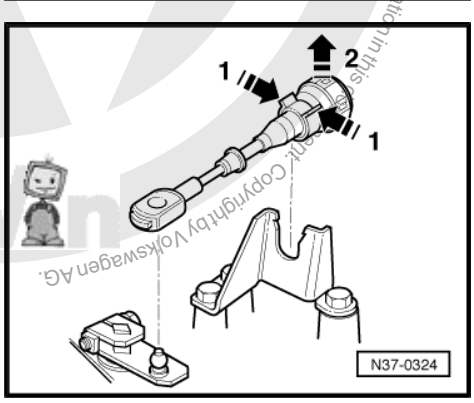

Note

- *Do not use pliers because the mounting tabs on the cable bracket could break off.*
- *Do not bend or kink the selector lever cable.*

– Pry the selector lever cable -1- off the selector shaft lever -3- using for example an open end wrench -2-.

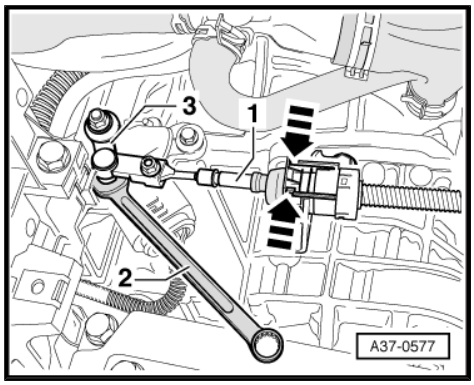

Protected by copyright. Copying for private or commercial purposes, in part or in whole, is not permitted unless authorised by Volkswagen AG. Volkswagen AG does not guarantee or accept any liability with respect to the correctness of information in this copy. Copyright by Volkswagen AG.

– Mount the Hose Clamps - Up To 25mm - 3094- on the hoses and remove the hoses form the ATF cooler.
– Disconnect the connections from the transmission and starter.
♦ Multifunction transmission range switch
♦ Starter

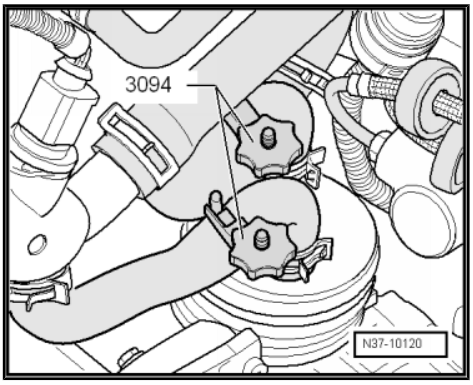

– Remove the wiring bracket -1- from the starter bolt -arrow-.
– Remove the upper starter bolt.
– Remove the upper engine/transmission connecting bolts.
– Remove the plenum chamber cover. Refer to ⇒ Body Exterior; Rep. Gr. 50 ; Plenum Chamber Cover; Plenum Chamber Cover, Removing and Installing .

So that engine and transmission can be supported:

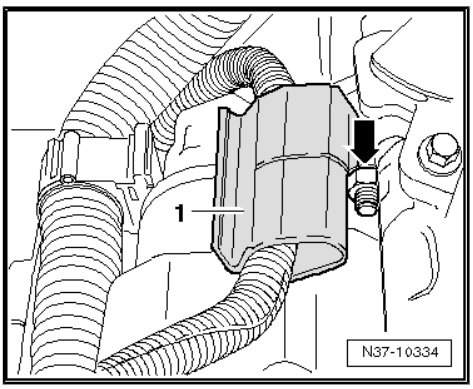

– Remove the wires -1- from the transport strap -3-.
– Remove the transport strap -3- from the engine -2- and pull it out of the eye -arrow-.
– Insert a Engine/Gearbox Support Shackle (2 pc.) - 10-222A/ 12- in »this« eye.

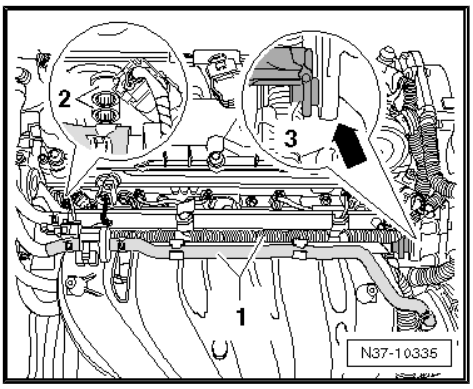

– Remove the bolts -arrows- for the left and right lock carrier retaining brackets.

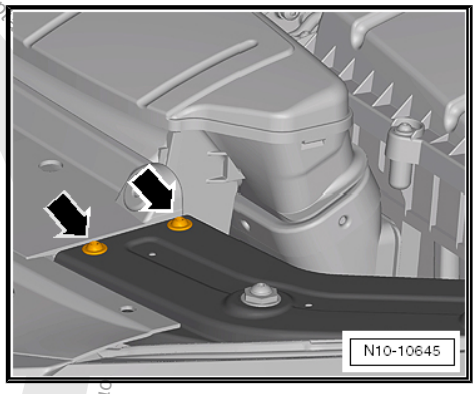

Protected by copyright. Copying for private or commercial purposes, in part or in whole, is not permitted unless authorised by Volkswagen AG. Volkswagen AG does not guarantee or accept any guarantee for the accuracy of information in this document. Copyright by Volkswagen AG.

– Remove the lower mounts on the Engine Support Bridge - Engine Support 28 - 10-222A/28- and replace with the Engine Support Bridge - Engine Support 28-2 - 10-222A/28-2- .

– Remove the bolts -arrows- for securing the engine support bridge on the lock carrier from the Engine Support Bridge - Engine Support 28-2 - 10-222A/28-2- .

• Use the bolts in the Engine Support Bridge - Engine Support 28-2 - 10-222A/28-2- for attaching the Engine Support Bridge - Engine Support 28 - 10-222A/28- . Not the bolts for the retaining bracket.

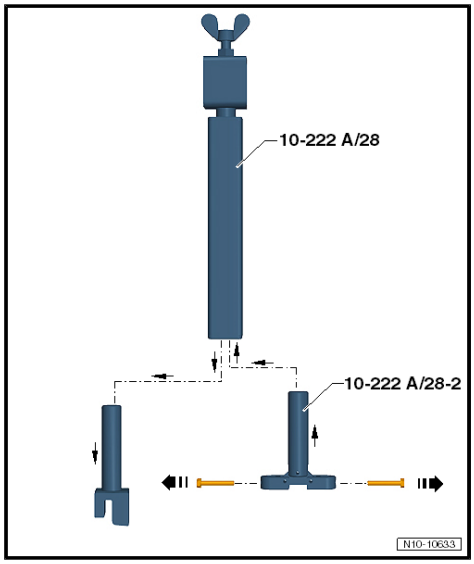

– Install the Engine Support Bridge - Engine Support 28 - 10-222A/28- and tighten the bolts to 8 Nm -arrows-.

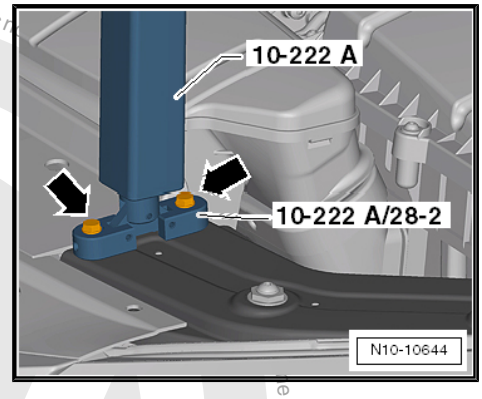

Caution

A second technician is needed to mount the Engine Support Bridge - 10-222A- on the vehicle to prevent the Engine Support Bridge - 10-222A- from tipping.

– Install the Engine Support Bridge - 10-222A- as shown.

– First slide the Engine Support - Basic Set - Movable Joints - T40091/3- -2- onto the Square Pipe from the Engine Support Bridge - 10-222A- .

– Mount the Engine Support Bridge - 10-222A- on the suspension strut towers and have a second technician hold it to prevent it from tipping.

– Push the Engine Support - Basic Set - Square Pipe - T40091/1- -5- from the front left and right through the Engine Support Bridge - Engine Support 28 - 10-222A/28- -6- and place on each side of the Engine Support - Supplement Kit - Movable Joint - T40093/4- -4-.

– Additionally attach the Engine Support - Bracket w/Spindle and Hook - 10-222A/10- -7- on the right Engine Support - Basic Set - Square Pipe - T40091/1- .

– Push the Engine Support - Basic Set - Rail with Holes - T40091/2- -9- with the Engine Support - Supplement Kit - Mount - T40093/5- -10- in the Engine Support - Supplement Kit - Movable Joint - T40093/4- -4-.

– Install the locking pins into the Engine Support - Basic Set - Rail with Holes - T40091/2- -9- and secure it with the cotter pins.

Protected by copyright. Copying for private or commercial purposes, in part or in whole, is not permitted unless authorised by Volkswagen AG. Volkswagen AG does not guarantee the correctness of information in this document. Copyright by Volkswagen AG.

1 - Engine Support Bridge - Engine Support 31 - Adapter 2 - 10-222A/31-2-

2 - Engine Support - Basic Set - Moveable Joint - T40091/3-

3 - Engine Support Bridge - Engine Support 31 - Adapter 1 - 10-222A/31-1-

4 - Engine Support - Supplement Kit - Movable Joint - T40093/4-

5 - Engine Support - Basic Set - Square Pipe - T40091/1-

6 - Engine Support Bridge - Engine Support 28 - 10-222A/28- with Engine Support Bridge - Engine Support 28-2 - 10-222A/28-2-

7 - Engine Support - Bracket w/ Spindle and Hook - 10-222A/10-

8 - Engine Support - Automatic Transmission Hook - 10-222A/7-

9 - Engine Support - Basic Set - Rail with Holes - T40091/2-

10 - Engine Support - Supplement Kit - Mount 5 - T40093/5-

11 - Engine Support Bridge - Spindle - 10-222A/11-

12 - Engine/Gearbox Support Shackle (2 pc.) - 10-222A/12-

❑ Engaged in the engine lifting eye -arrow-.

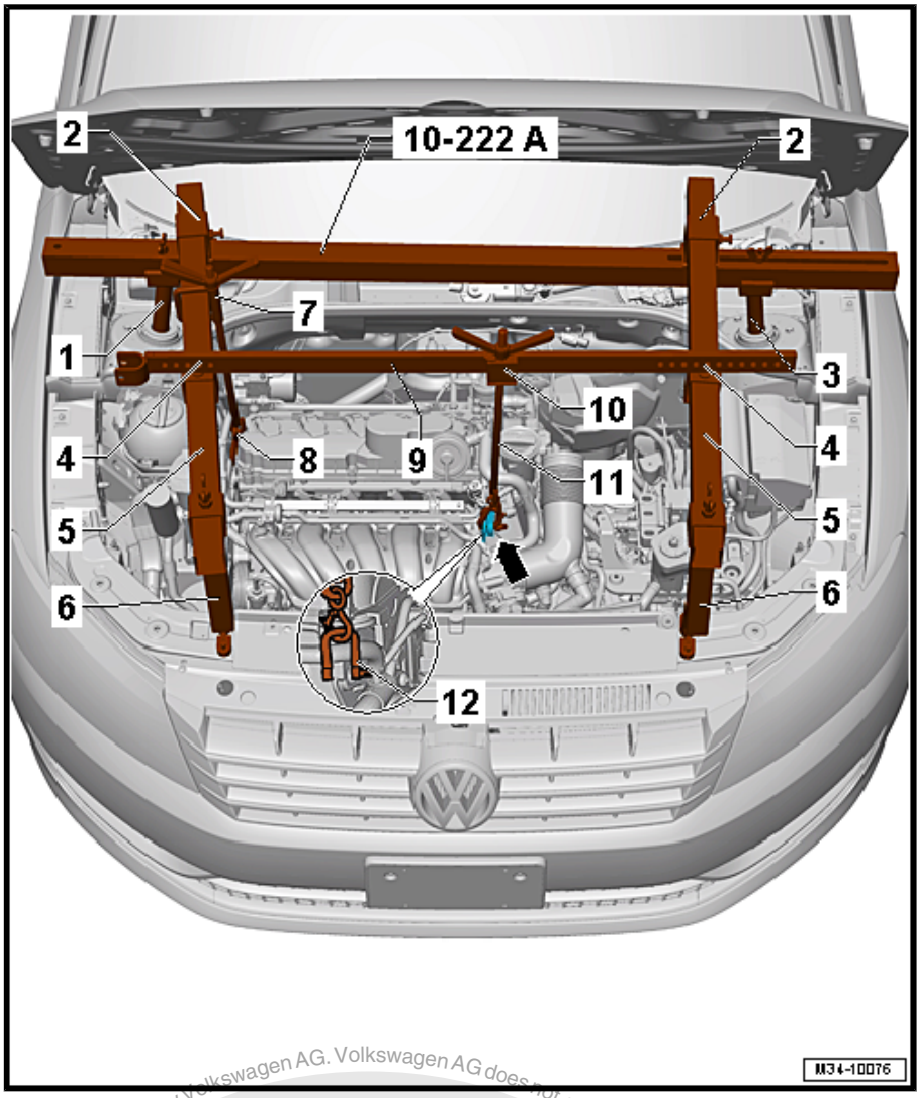

– Extend the right Engine Support - Bracket w/Spindle and Hook - 10-222A/10- -7- with the Engine Support - Automatic Transmission Hook - 10-222A/7- -8-.

The hook on the Engine Support - Automatic Transmission Hook - 10-222A/7- points downward and will be engaged on cylinder block later.

– Engage the left Engine Support Bridge - Spindle - 10-222A/11- -11- in the Engine/Gearbox Support Shackle (2 pc.) - 10-222A/12- -12-.

Copyright by Volkswagen AG. Volkswagen AG does not guarantee or accept any liability with respect to the correctness of information in this document. Copying for private or commercial purposes, in part or in whole, is not permitted unless authorised by Volkswagen AG. Protected by copyright.

The left driveshaft must be removed later in the procedure.

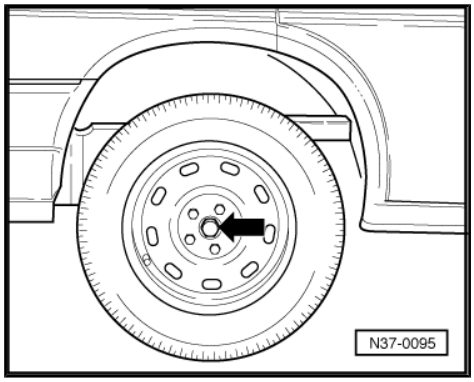

- With the vehicle still standing on its wheels, loosen the left front collar bolt -arrow- a maximum 90°, otherwise the wheel bearing will get damaged. Refer to ⇒ Suspension, Wheels, Steering; Rep. Gr. 40 ; Drive Axles, Removing and Installing .
- Raise the vehicle and remove the front wheels.
- Remove the noise insulation. Refer to ⇒ Body Exterior; Rep. Gr. 50 ; Noise Insulation .
- Remove the left front housing liner. Refer to ⇒ Body Exterior; Rep. Gr. 66 ; Wheel Housing Liner; Front Wheel Housing Liner, Removing and Installing .

Vehicles with Power Steering

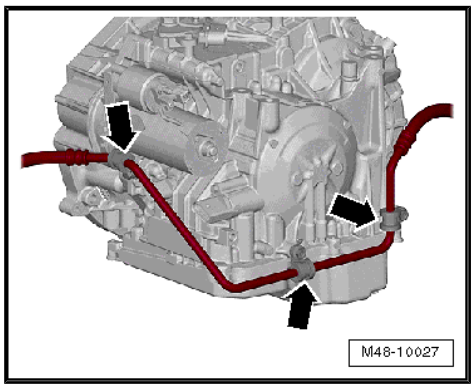

- Remove the brackets and the power steering lines from the transmission -arrows-.

Continuation for All Vehicles

> ⚠ **Caution**
>
> *Risk of damaging the decoupling element.*
>
> - *Do not bend the decoupling element more than 10°.*
> - *Do not load the decoupling element.*
> - *Do not damage the wire mesh on the decoupling element.*

- Separate the exhaust system at the double clamp and remove the front exhaust pipe bracket from the subframe. Refer to ⇒ Rep. Gr. 26

- Remove the control arms from the wheel bearing housing on both sides.

Refer to ⇒ Suspension, Wheels, Steering; Rep. Gr. 40 ; Front Suspension and Control Arm; Overview - Front Suspension and Control Arm for the tightening specifications.

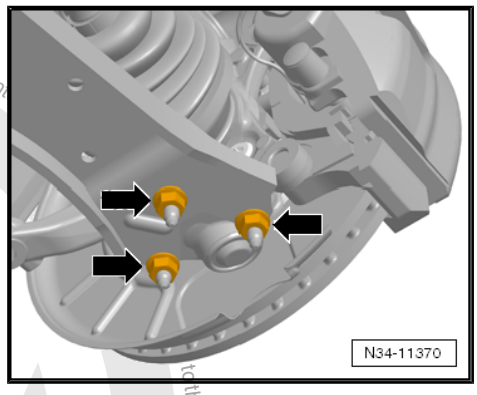

- If equipped, remove the heat shield above the right drive axle -arrows-.

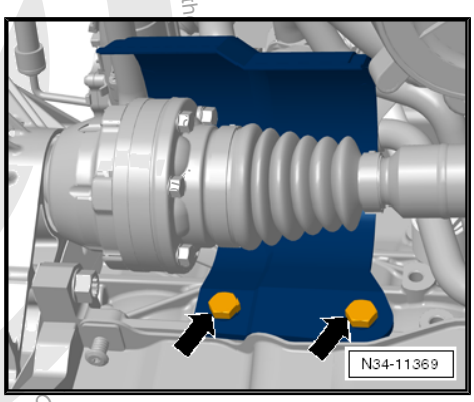

Copyright by Volkswagen AG. Protected by copyright. Copying for private or commercial purposes, part or in whole, is not permitted unless authorised by Volkswagen AG. Volkswagen AG does not guarantee

– Remove both drive axles from the transmission. Refer to ⇒ Suspension, Wheels, Steering; Rep. Gr. 40 ; Drive Axles, Removing and Installing .

– Remove the left drive axle. Refer to ⇒ Suspension, Wheels, Steering; Rep. Gr. 40 ; Drive Axles, Removing and Installing .

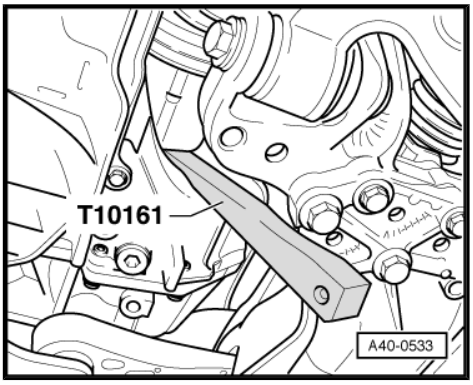

– Lift the right drive axle as far as possible and then tie it up.

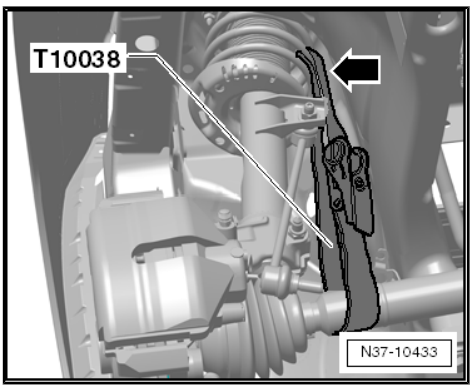

– Disconnect the connectors -1- and 2- from the transmission.

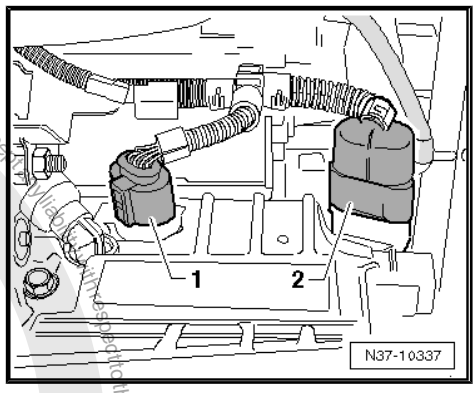

– Remove the connector from the bracket under the starter -1- and then disconnect it.

– Remove bracket from lower starter bolt.

– Remove the lower starter bolt and the starter. Refer to ⇒ Electrical Equipment; Rep. Gr. 27 ; Starter; Starter, Removing and Installing .

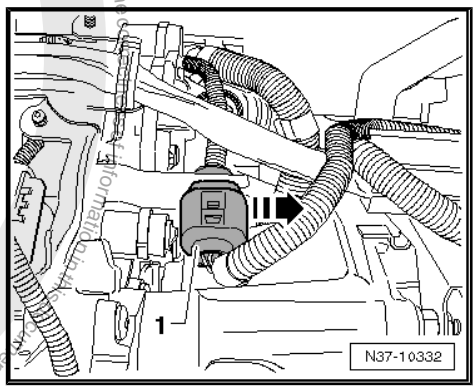

Protected by copyright. Copying for private or commercial purposes, in part or in whole, is not permitted unless authorised by Volkswagen AG. Volkswagen AG does not guarantee or accept any liability with respect to the correctness of information in this document. Copyright by Volkswagen AG.

– Remove the pendulum support: First bolt -A- then bolts -B-.

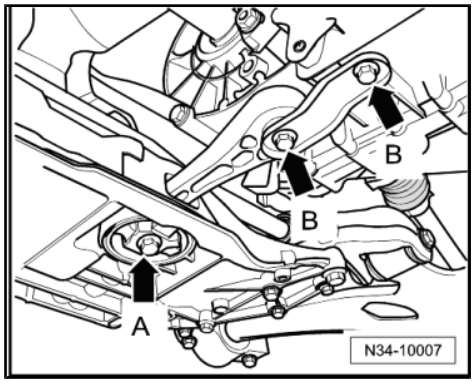

– Turn the cap -1- in the direction of -arrow- and remove it.

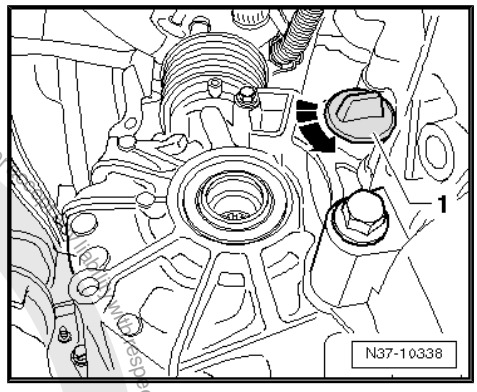

– Remove the six converter nuts -arrow- with the Socket - Sw15 - V/175- .

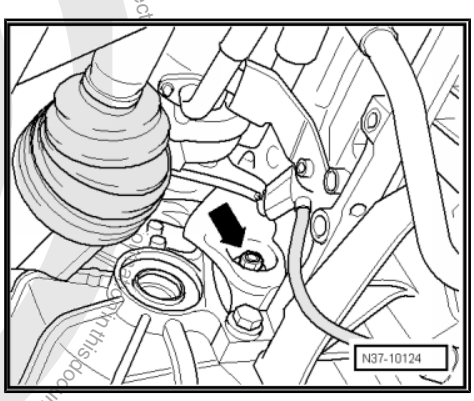

Note

Carefully rotate the engine further!

– Engage the Engine Support - Automatic Transmission Hook - 10-222A/7- on the cylinder block.

Tension the right spindle one turn (more turns are not necessary).

– Support the engine and transmission with the left spindle. Do not lift.

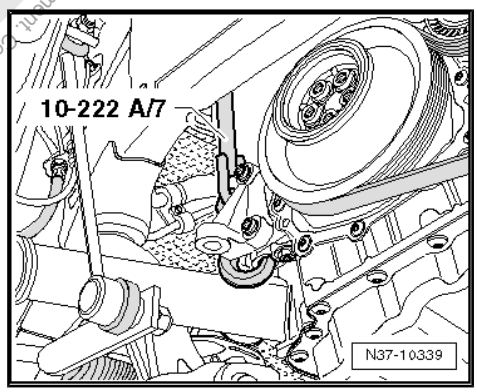

Protected by copyright. Copying for private or commercial purposes, in part or in whole, is not permitted unless authorised by Volkswagen AG. Volkswagen AG does not guarantee or accept any liability with respect to the content of this document.

– Remove the ground cable from the transmission bracket -A-, if equipped.

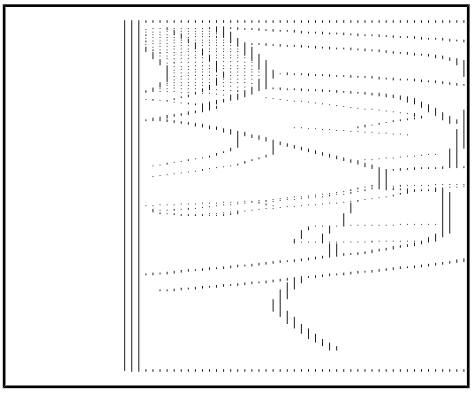

– Remove the transmission mount bolts -2- to the transmission bracket -A- and remove the transmission bracket bolts -1- to the transmission.

– Remove the subframe mount transmission bracket -A-. To do this slightly lower the engine with the transmission using the Engine Support Bridge - 10-222A- spindles.

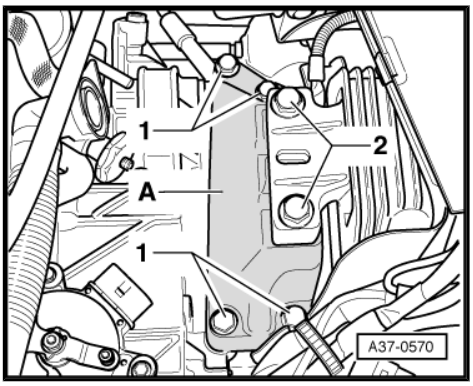

Four turns are sufficient.

– Remove the lower connecting bolts between the engine and the transmission.

– For safety, leave one bolt installed that is easily accessible.

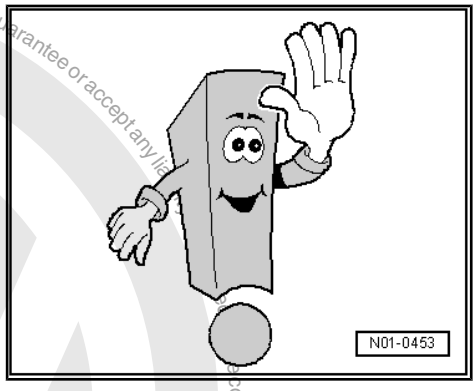

– Before removing the last connecting bolt, support the transmission with the Engine and Gearbox Jack - VAS6931- , the Transmission Support - 3282- and the Transmission Support - Mounting Plate 36 - 3282/36- .

– Secure the transmission to the Transmission Support - 3282- using the nut -1- on the double bolt.

– Remove the last bolt.

– Press the transmission off of the engine, at the same time press the torque converter off of the engine drive plate.

– Guide the transmission past the power steering line and past the subframe when lowering it. Adjust the Transmission Support - 3282- slightly, if necessary.

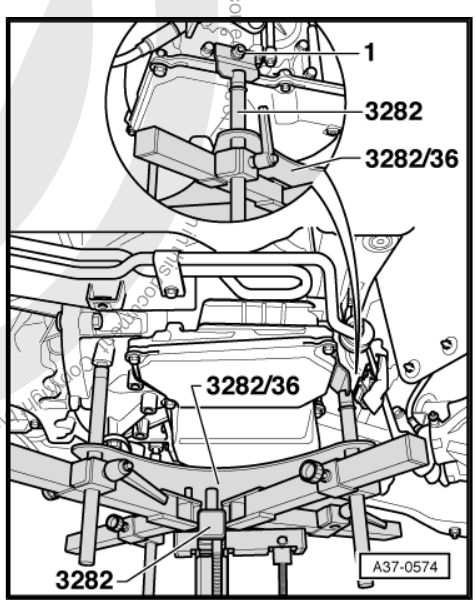

Protected by copyright. Copying for private or commercial purposes, in part or in whole, is not permitted unless authorised by Volkswagen AG. Volkswagen AG does not guarantee or accept any liability with respect to the correctness of information in this document. Copyright by Volkswagen AG.

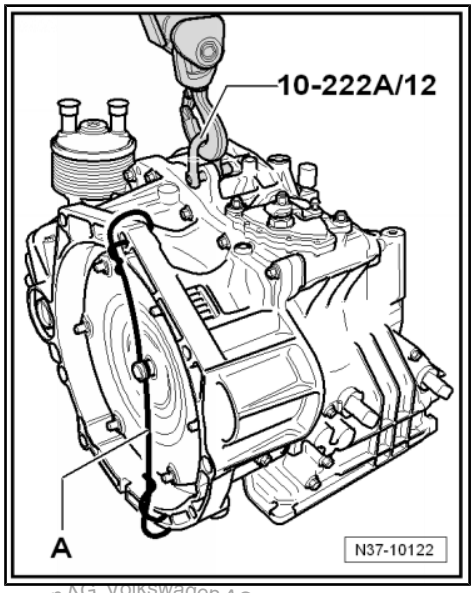

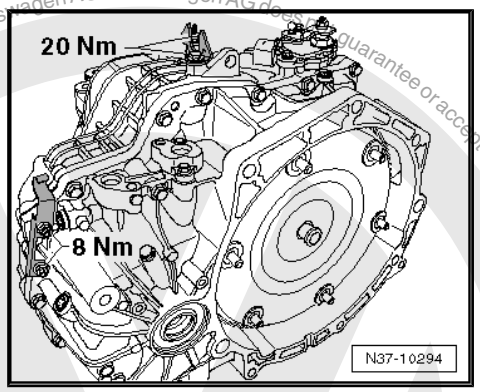

Note

- *Be careful not to damage the connector on the front of the transmission during removal and installation, for example, by coming in contact with the power steering line. Replace the wiring harness in the transmission if the connector gets damaged. Refer to ⇒ "4.1 Overview - Valve Body", page 128 .*
- *Pay attention to the torque converter. It must be removed together with the transmission. Secure the torque converter with, for example a wire -A- to prevent it from falling out.*
- *Bear in mind that when installing a new transmission, the cable bracket and the selector lever cable bracket for example must be replaced.*

7.4 Transmission, Installing, Jetta MY 2011

– Check that the alignment sleeves are pressed into the engine flange.

– Make sure the intermediate plate fits correctly between the engine and the transmission. The plate must contact the engine along entire perimeter when pressing lightly against engine using both hands. If it is above the engine, then it is not hooked into the cylinder block correctly.

– Make sure the torque converter is installed correctly. Refer to ⇒ "1.1 Torque Converter, Removing and Installing", page 10.

Further installation is performed in the reverse order of the removal.

The engine and the transmission must be mounted in the subframe mount without tension. Refer to ⇒ Rep. Gr. 10 ; Engine, Removing and Installing for the procedure description.

– Replace all the bolts from the left subframe mount.

– Install all new bolts first by hand.

Protected by copyright. Copying for private or commercial purposes, in part or in whole, is not permitted unless authorised by Volkswagen AG. Volkswagen AG does not guarantee or accept any liability with respect to the correctness of information in this document. Copyright by Volkswagen AG.

First tighten the bolts -1- to 40 Nm +90° when installing the transmission bracket -A- on the transmission.

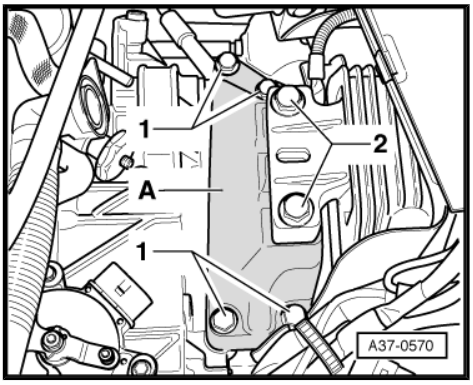

– Align the engine/transmission in its installed position. Lift until the transmission bracket is touching the transmission mount completely.

> **Caution**
>
> ***There is a risk of damaging the threads in transmission bracket by inserting bolts at an angle.***
>
> ♦ ***Before installing the bolts -2-, the transmission bracket and transmission mount support arm must be absolutely parallel to each other. If necessary, lift the back of the transmission using the Engine and Gearbox Jack .***

Adjust the »old fit« between both bolts using a screwdriver when tightening the transmission bracket to the transmission mount bolts -2-. Tighten the two larger bolts to 60 Nm +90°.

> **WARNING**
>
> ***Only remove Engine Support Bridge - 10-222A- when all the left and right subframe mount bolts are tightened to the tightening specification.***

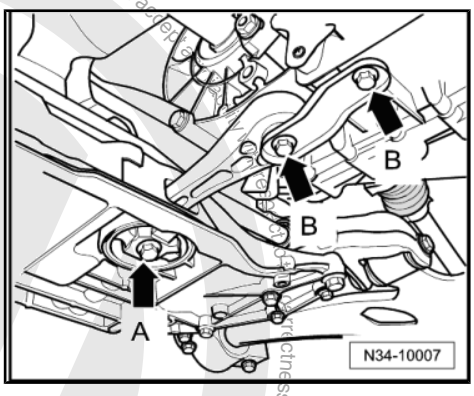

– Install the pendulum support with new bolts first on the transmission -B arrows- and then on the subframe -arrow A-. Tightening specification. Refer to ⇒ Suspension, Wheels, Steering; Rep. Gr. 40 ; Subframe; Overview - Subframe .

– Attach the drive axles to the transmission. Refer to ⇒ Suspension, Wheels, Steering; Rep. Gr. 40 ; Drive Axles, Removing and Installing .

– Install the heat shield over the right drive axle, if removed. Refer to ⇒ Suspension, Wheels, Steering; Rep. Gr. 40 ; Drive Axles, Overview and Servicing; Drive Axle Heat Shield .

– Assemble the exhaust system and install the exhaust system bracket to the subframe. Refer to ⇒ Rep. Gr. 26 .

– Install the starter. Refer to ⇒ Electrical Equipment; Rep. Gr. 27 ; Starter; Starter, Removing and Installing .

– Attach the clamps for the power steering line to the transmission. Refer to ⇒ Suspension, Wheels, Steering; Rep. Gr. 48 ; Hydraulic Power Steering; Overview - Hydraulic Power Steering .

– Connect the coolant hoses to the ATF cooler and check the coolant level. Refer to ⇒ Rep. Gr. 19 ; Cooling System Components .

– Attach the selector lever cable to the transmission and adjust it. Refer to ⇒ “4.5 Selector Lever Cable, Adjusting”, page 38 .

– Install the plenum chamber cover. Refer to ⇒ Body Exterior; Rep. Gr. 50 ; Plenum Chamber Cover; Plenum Chamber Cover, Removing and Installing .

Protected by copyright. Copyright by Volkswagen AG. Copyright by Volkswagen AG does not guarantee or accept any liability with respect to the correctness of information in this document. Copyright by Volkswagen AG. Distribution to third parties, translation and any reproduction not permitted without the express authorised by Volkswagen AG. Copyright by Volkswagen AG. Protected by copyright. Copyright by Volkswagen AG. Copyright by Volkswagen AG does not guarantee or accept any liability with respect to the correctness of information in this document. Copyright by Volkswagen AG.

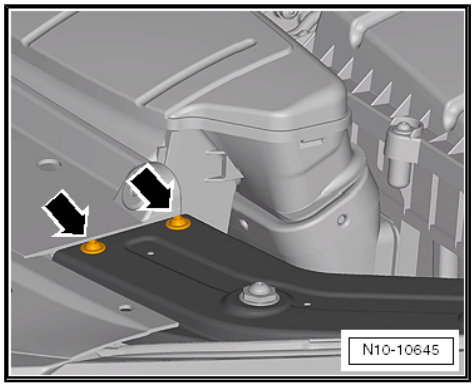

- Install the bolts -arrows- for the left and right lock carrier retaining brackets to the tightening specification. Refer to ⇒ Body Exterior; Rep. Gr. 50 ; Lock Carrier; Lock Carrier - Attachments .
- Install the battery tray and the battery. Refer to ⇒ Electrical Equipment; Rep. Gr. 27 ; Battery; Battery, Removing and Installing .
- Connect the battery and follow the steps after connecting the battery. Refer to ⇒ Electrical Equipment; Rep. Gr. 27 ; Battery; Battery, Disconnecting and Connecting .
- Check the ATF level after installing. Refer to ⇒ “11 ATF Level, Checking and Filling”, page 112 .
- Install the noise insulation. Refer to ⇒ Body Exterior; Rep. Gr. 50 ; Noise Insulation .
- Install the wheels. Refer to ⇒ Suspension, Wheels, Steering; Rep. Gr. 44 ; Wheel Installation Tightening Specifications .
- Perform a basic setting. Connect the Vehicle Diagnostic Tester and then select “Perform basic setting” under `Guided Functions`.

Tightening Specifications

Refer to
⇒ “7.5 Tightening Specifications, Transmission to Engine”, page 102 .

Component	Nm
Drive plate to torque converter	60
Selector cable bracket to transmission	8
Cable bracket to transmission	20

7.5 Tightening Specifications, Transmission to Engine

⇒ “7.5.2 Tightening Specifications, Jetta MY 2011, 2.0L 85 kW Engine”, page 104 .

⇒ “7.5.3 Tightening Specifications, Jetta MY 2011, 2.5L 125 kW Engine”, page 105 .

7.5.1 Tightening Specifications, Jetta MY 2011, 2.0L 77 kW Engine

Note

- *The -arrows- point to the alignment sleeves in the engine.*
- *When removing and installing pay attention to the different bolt lengths.*
- *If necessary the bolt length may differ from the illustration.*

Protected by copyright. Copying for private or commercial purposes, in part or in whole, is not permitted unless authorised by Volkswagen AG. Volkswagen AG does not guarantee or accept any liability with respect to the correctness of information in this document. Copyright by Volkswagen AG.

1 - Direction of Travel

M12 - 80 Nm

- ❑ When using the Insert Tool - 18mm - T10179- : 65 Nm.

M10 - 40 Nm

- ❑ These bolts are located inside the lower flange
- ❑ In conjunction with the cover plate the bolt length is 35 mm

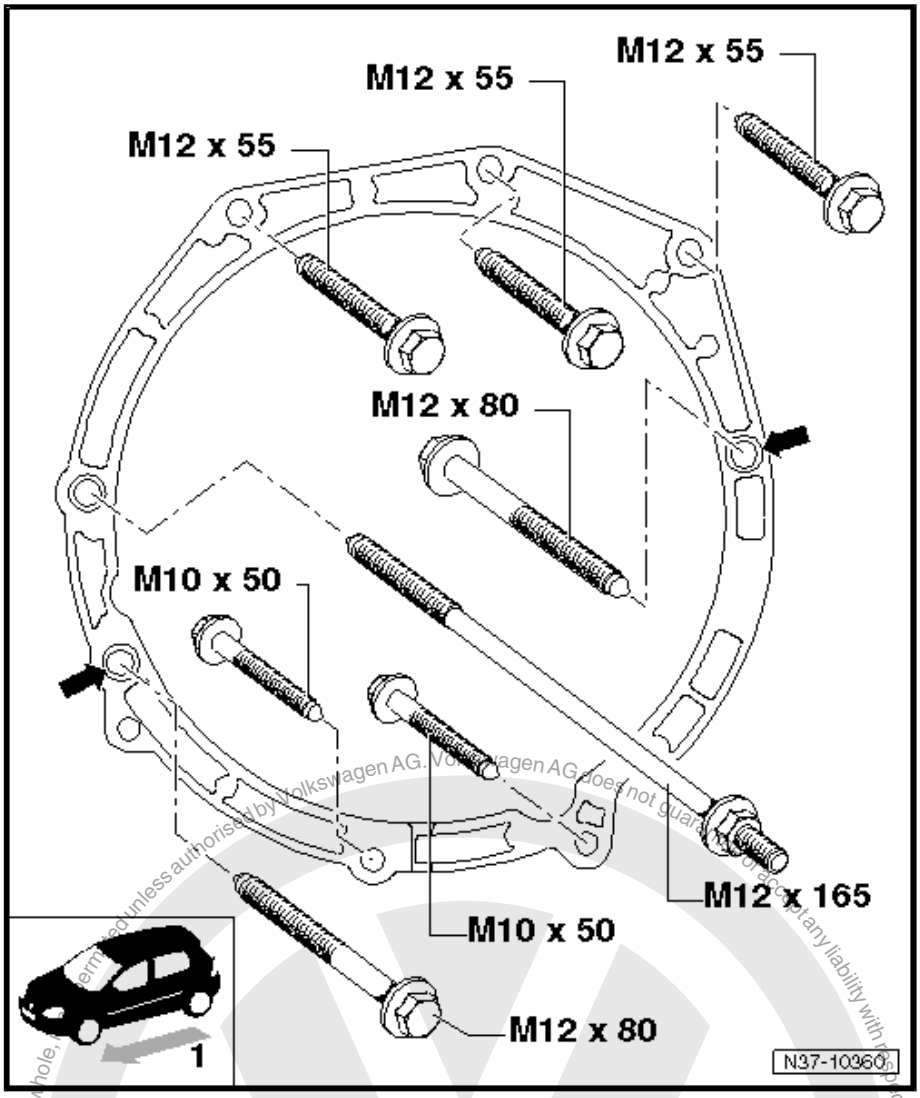

Protected by copyright. Copying for private or commercial purposes, in part or in whole, is not permitted unless authorised by Volkswagen AG. Volkswagen AG does not guarantee or accept any liability with respect to the correctness of information in this document. Copyright by Volkswagen AG.

7.5.2 Tightening Specifications, Jetta MY 2011, 2.0L 85 kW Engine

Note

- *The -arrows- point to the alignment sleeves in the engine.*
- *When removing and installing pay attention to the different bolt lengths.*
- *If necessary the bolt length may differ from the illustration.*

1 - Direction of Travel

M12 - 80 Nm

- ❑ When using the Insert Tool - 18mm - T10179- : 65 Nm.

M10 - 40 Nm

- ❑ These bolts are located inside the lower flange

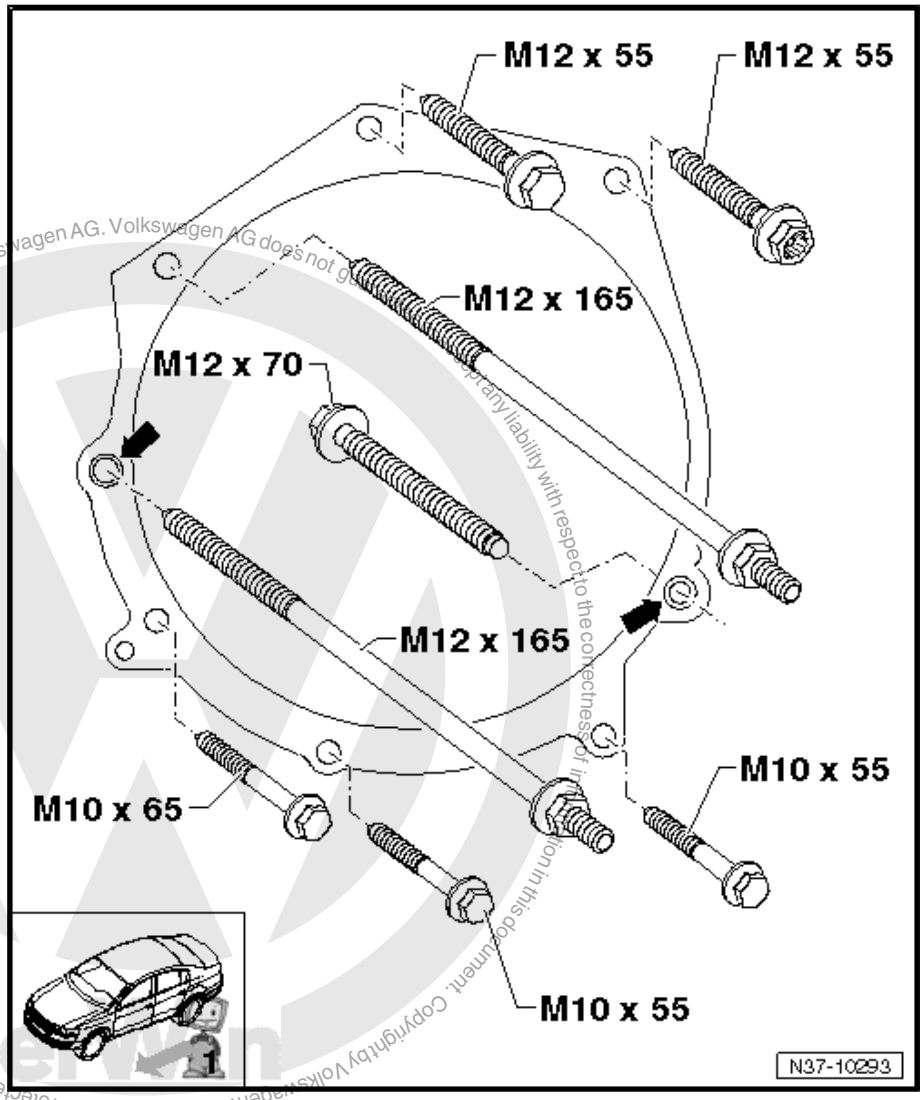

Protected by copyright. Copyright for private or commercial purposes, in part or in whole, is not permitted unless authorised by Volkswagen AG. Volkswagen AG does not give any liability with respect to the correctness of information in this document. Copyright by Volkswagen AG.

7.5.3 Tightening Specifications, Jetta MY 2011, 2.5L 125 kW Engine

Note

- *The -arrows- point to the alignment sleeves in the engine.*
- *When removing and installing pay attention to the different bolt lengths.*
- *If necessary the bolt length may differ from the illustration.*

1 - Direction of Travel

M12 - 80 Nm

- When using the Insert Tool - 18mm - T10179- : 65 Nm.

M10 - 40 Nm

- These bolts are located inside the lower flange

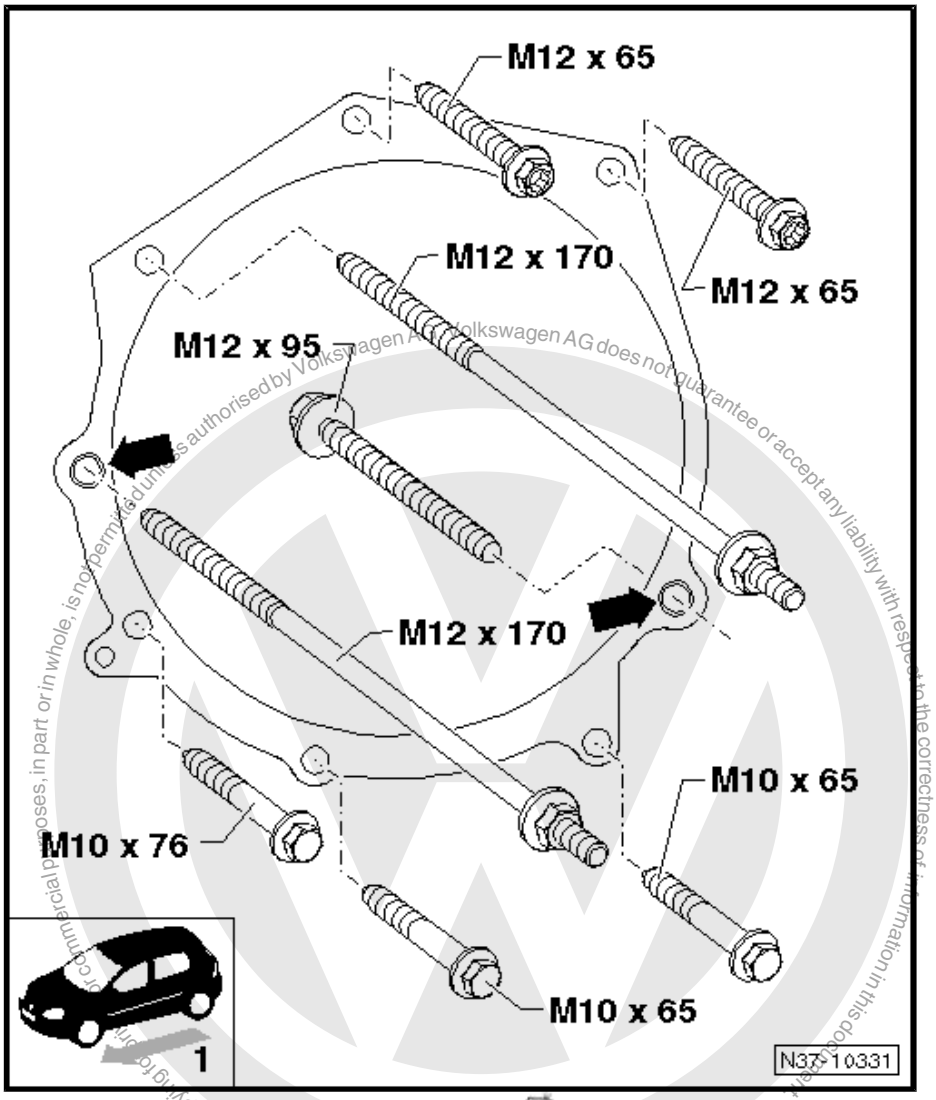

Protected by copyright. Copying for commercial purposes, in part or in whole, is not permitted unless authorised by Volkswagen AG. Volkswagen AG does not guarantee or accept any liability with respect to the correctness of information in this document. Copyright by Volkswagen AG.

8 Transmission, Transporting

Special tools and workshop equipment required

- Engine/Gearbox Support Shackle (2 pc.) - 10-222A/12-
- Shop Crane - VAS6100-

The Engine/Gearbox Support Shackle (2 pc.) - 10-222A/12- can be used when transporting the automatic transmission and for setting up the Transmission Support - 3282- .

– Secure the torque converter for example with a wire -A- to prevent it from falling when being transported.

– Secure the Engine/Gearbox Support Shackle (2 pc.) - 10-222A/12- at the top of the transmission housing.

– Engage the hook of the Shop Crane - VAS6100- into the shackles a shown in the illustration.

– Lift the transmission with the Shop Crane - VAS6100- and Engine/Gearbox Support Shackle (2 pc.) - 10-222A/12- .

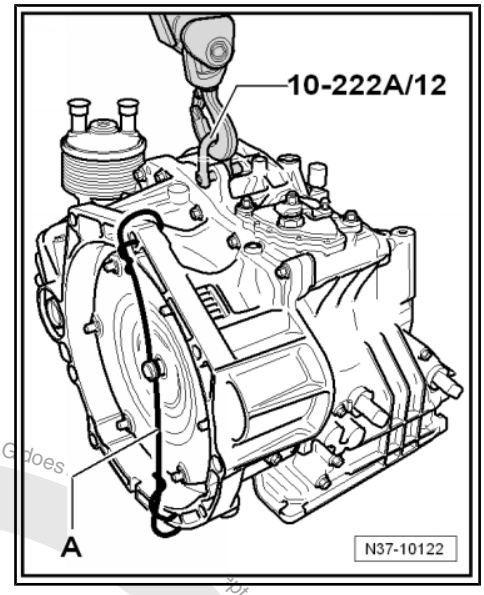

Protected by copyright. Copyright for private or commercial purposes, in part or in whole, is not permitted unless authorised by Volkswagen AG. Volkswagen AG does not accept any liability with respect to the correctness of information in this document. Copyright by Volkswagen AG.

9 Transmission, Securing in Engine/ Transmission Holder

Special tools and workshop equipment required

- Holding Fixture - VW313-
- Holding Fixture - VW540-
- Engine And Transmission Holder - VAS6095A-

Procedure

- Drain the ATF. Refer to ⇒ “11.3 ATF, Draining and Filling”, page 115 .

– Secure the transmission on the Holding Fixture - VW540- -arrows-.

– Insert the transmission into the Holding Fixture - VW313- or the Engine And Transmission Holder - VAS6095A- using the Shop Crane - VAS6100- .

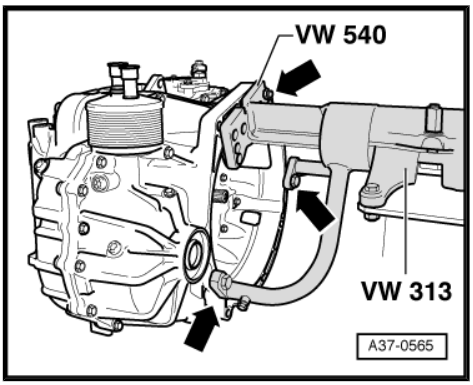

WARNING

The center of gravity of the transmission is outside the center of rotation at the holding fixture. To prevent back swing, a second technician must hold transmission housing when rotating the transmission on the Holding Fixture - VW313- .

Protected by copyright. Copying for private or commercial purposes, in part or in whole, is not permitted unless authorised by Volkswagen AG. Volkswagen AG does not guarantee or accept any liability with respect to the correctness of information in this document. Copyright by Volkswagen AG.

10 ATF Cooler

⇒ “10.1 Overview - ATF Cooler Round Version”, page 108 .

⇒ “10.2 Overview - ATF Cooler Rectangular Version”, page 109 .

10.1 Overview - ATF Cooler Round Version

Copyright by Volkswagen AG. Volkswagen AG does not guarantee or accept any liability with respect to the correctness of information in this document. Copyright by Volkswagen AG. Protected by copyright. Copying for private or commercial purposes, in part or in whole, is not permitted unless authorised by Volkswagen AG.

1 - Transmission Housing

2 - O-Ring

- ❑ Replace after removing

3 - ATF Cooler

- ❑ Installation position. Refer to ⇒ Fig. ““ATF Cooler Installation Position”“ , page 108

4 - O-Ring

- ❑ Replace after removing

5 - Washer

6 - Plate Spring

- ❑ Installed position: The convex side faces toward the bolt -item 7- ⇒ Item 7 (page 108)

7 - Bolt

- ❑ 36 Nm

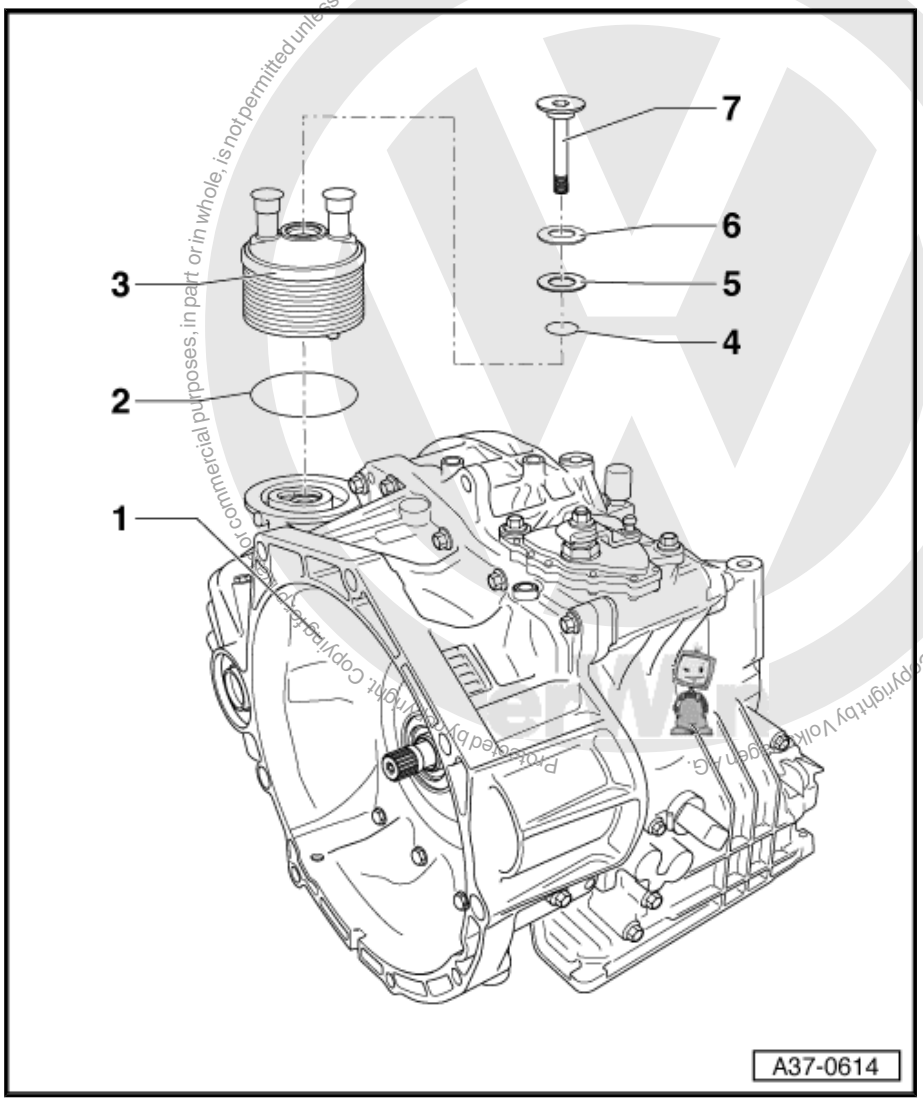

ATF Cooler Installation Position

– Insert the tab -arrow B- into the transmission housing opening when installing the ATF cooler -1-.

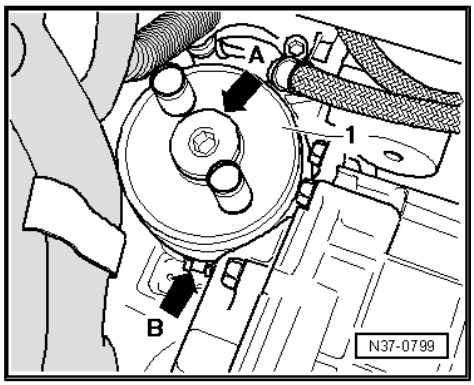

10.2 Overview - ATF Cooler Rectangular Version

⇒ "10.2.1 ATF Cooler, Removing and Installing, Rectangular Version ", page 109

1 - Transmission

2 - O-Rings

- ❑ Always replace.

3 - ATF Cooler

- ❑ Removing and installing. Refer to ⇒ "10.2.1 ATF Cooler, Removing and Installing, Rectangular Version ", page 109 .

4 - Bolt

- ❑ 20 Nm
- ❑ Quantity: 4 M8 x 25

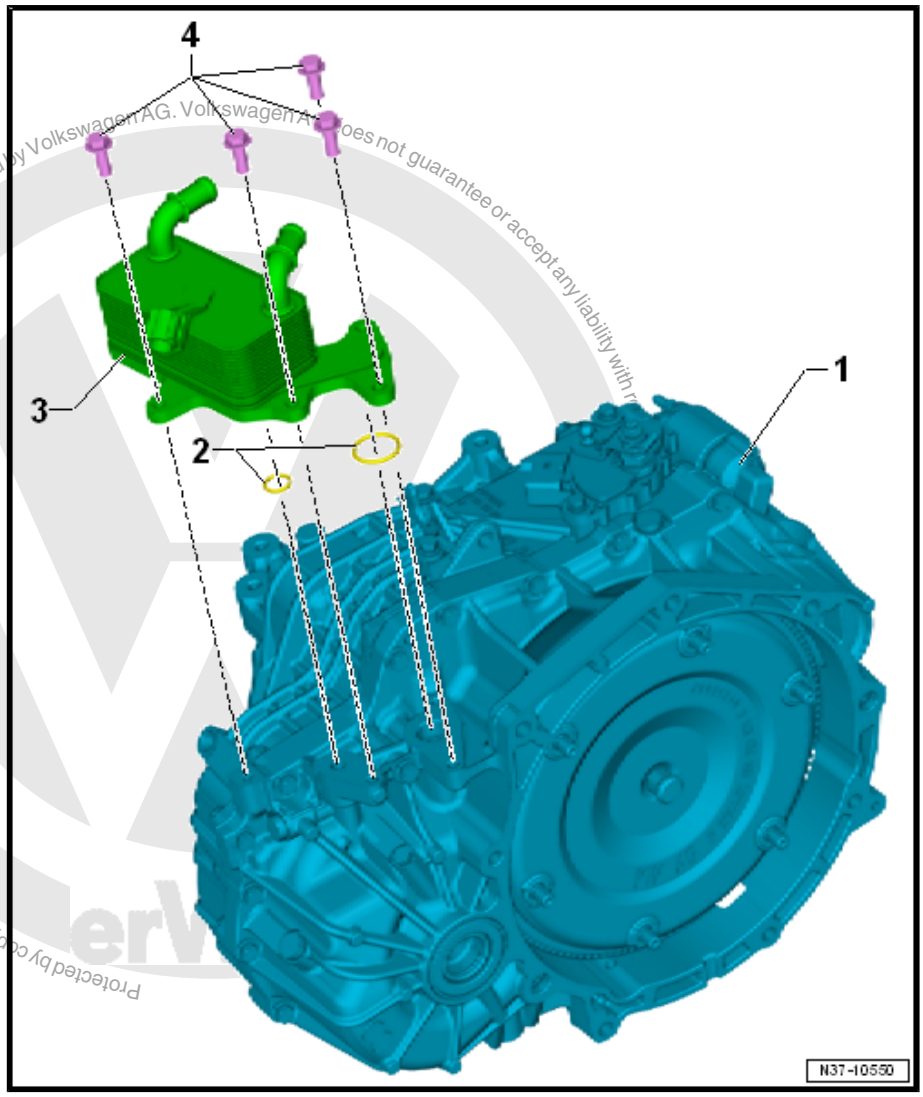

Protected by copyright. Copying for private or commercial purposes, in part or in whole, is not permitted unless authorised by Volkswagen AG. Volkswagen AG does not guarantee or accept any liability with r

10.2.1 ATF Cooler, Removing and Installing, Rectangular Version

Special Tools and Equipment

Special tools and workshop equipment required

- ♦ Hose Clamps - Up To 25mm - 3094-
- ♦ Hose Clamps - Up To 40mm - 3093-
- ♦ Spring clip pliers

Removing

– Move the selector lever into »P«.

– Remove the engine cover with the air filter. Refer to ⇒ Rep. Gr. 24 .

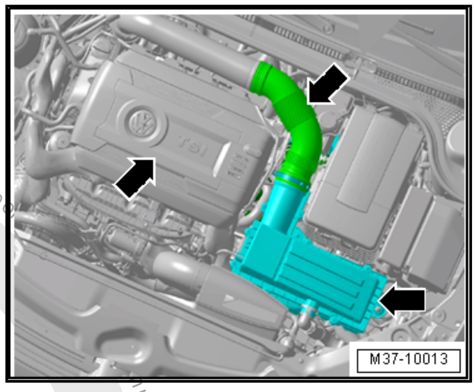

– Remove the battery and battery tray. Refer to ⇒ Rep. Gr. 27 .

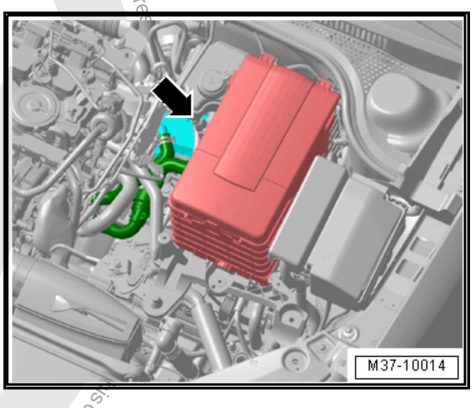

– Disconnect the selector lever cable on the clips -arrow-.

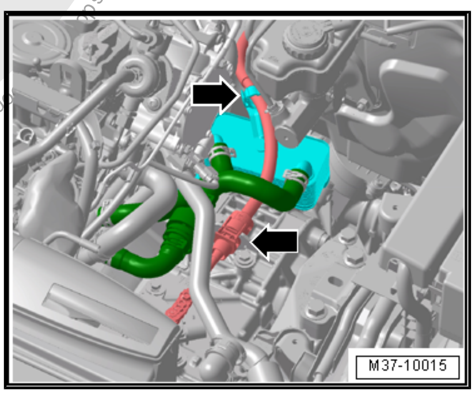

Note

- *Mark the ATF cooler coolant hoses to prevent confusing them when installing them later.*
- *The cooling system is under pressure when the engine is warm.*
- *Cover the coolant reservoir cap with a cloth and open it carefully before removing the coolant hoses.*

– Clamp the coolant hoses with Hose Clamps - Up To 25mm - 3094- and remove them from the ATF cooler.

– Seal the coolant hoses and connections with plugs taken from the Engine Bung Set - VAS6122- .

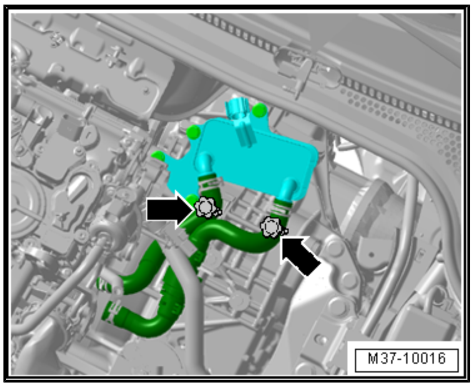

Protected by copyright. Copying for private or commercial purposes, in part or in whole, is not permitted unless authorised by Volkswagen AG. Volkswagen AG does not guarantee

– Remove the bolts -arrows- and remove the ATF cooler.

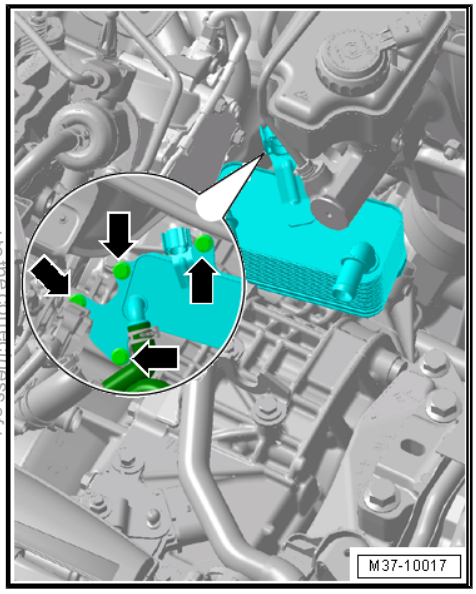

Installing

- Tightening Specification -item 4- ⇒ Item 4 (page 109) .

Install in reverse order of removal while. Note the following:

Note

Always replace the O-rings.

Protected by copyright. Copying for private or commercial purposes, in part or in whole, is not permitted unless authorised by Volkswagen AG. Volkswagen AG does not guarantee or accept any liability with respect to the correctness of information in this document. Copyright by Volkswagen AG.

11 ATF Level, Checking and Filling

⇒ “11.1 ATF Level, Checking”, page 113

⇒ “11.2 ATF, Filling”, page 114

⇒ “11.3 ATF, Draining and Filling”, page 115

Note the following information:

- Refer to this repair manual. Refer to ⇒ “1 General Repair Information”, page 1 .
- ATF. Refer to ⇒ “1.2 ATF”, page 1 .
- For the »filler tube« ⇒ page 3 .
- It is necessary to use the Oil Filler - Adapter 6 - VAS6262/6- on some oil containers.
- It may be necessary to shorten the bleed pipe on the Oil Filler - VAS6262A- . Refer to ⇒ page 112 .

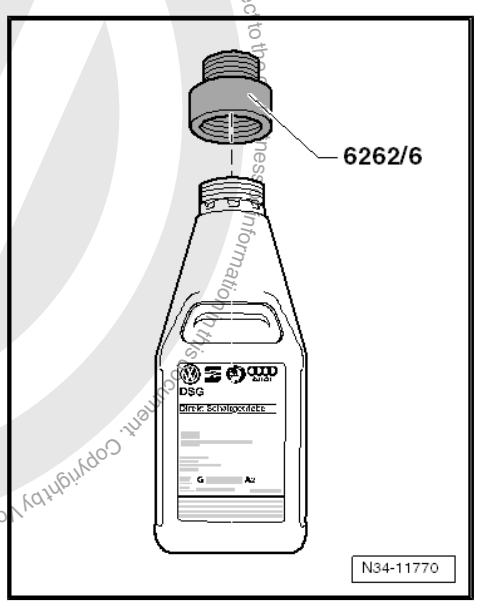

Shorten the Bleed Pipe on the Oil Filler - VAS6262A- as Follows:

– Shorten the pipe to dimension -a-. This assures the bleed pipe on the Oil Filler - VAS6262A- will not touch the bottom on some oil containers.

• Dimension -a- = 210 mm

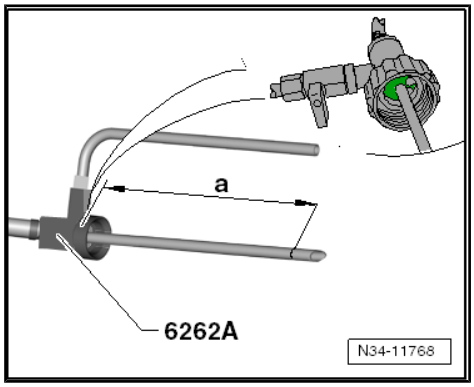

Note

Dimension -a- is measured starting from the shaft (the green surface) on the Oil Filler - VAS6262A- .

– Make a mark on the bleed pipe, dimension -a-, and cut it, with for example the Brake Line Tool Kit - Pipe Cutter - VAS6056/2- .

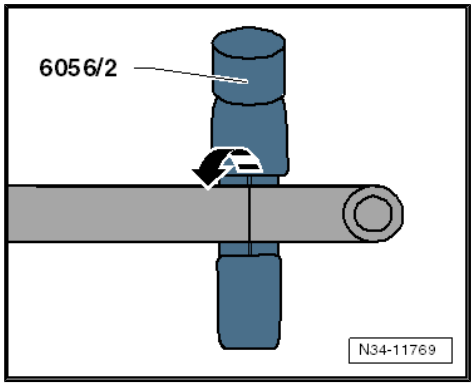

Special tools and workshop equipment required

- Torque Wrench 1331 5-50Nm - VAG1331-
- Used Oil Collection and Extraction Unit - SMN372500-
- Vehicle Diagnostic Tester

Protected by copyright. Copying for private or commercial purposes, in part or in whole, is not permitted unless authorised by Volkswagen AG. Volkswagen AG does not guarantee or accept any liability with respect to the correctness of information in this document. Copyright by Volkswagen AG.

- Shop Crane - Drip Tray - VAS6208-
- Oil Filler - VAS6262A-
- Oil Filler - Adapter 2 - VAS6262/2-
- Also for some oil containers Oil Filler - Adapter 6 - VAS6262/6-

If ATF is Filled, Only Use the ATF Available As A Replacement Part. Refer to the Parts Catalog.

– Always replace the seal -arrow- for the ATF check plug when checking the ATF level.

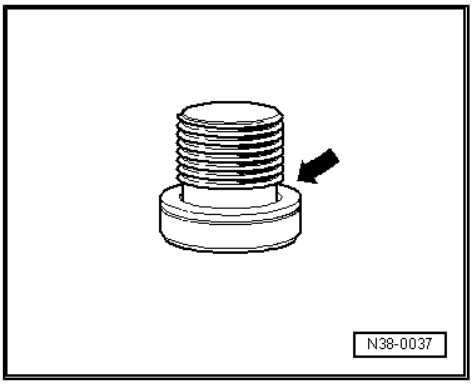

11.1 ATF Level, Checking

Procedure

– Turn off the engine.

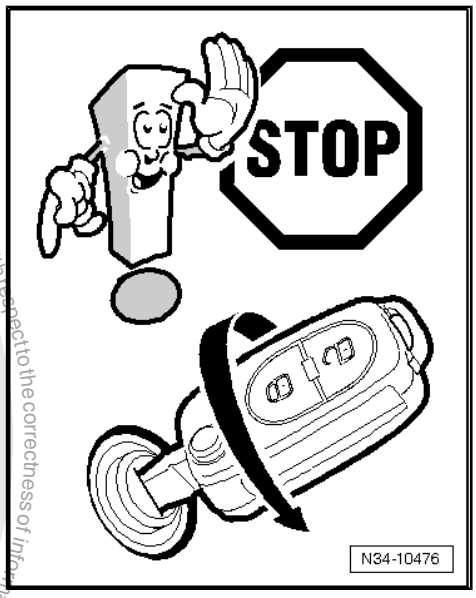

Protected by copyright. Copying for private or commercial purposes, in part or in whole, is not permitted unless authorised by Volkswagen AG. Volkswagen AG does not guarantee or accept any liability with respect to the correctness of information in this document. Copyright by Volkswagen AG.

The ATF temperature must not be more than approximately 30 ° C (86 °F) at the start of the test.

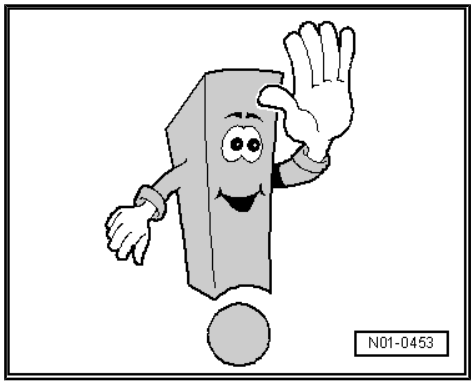

- Transmission is not in emergency running mode, and ATF temperature is not higher than 30 °C (86 °F).
- Vehicle is level
- The selector lever is in “P.”

– Connect the Vehicle Diagnostic Tester and move through selections until it is ready to be used. Refer to ⇒ “1 Tester, Connecting”, page 13 .

– Press »right« Guided Functions.

– Select the vehicle, the transmission and check ATF level.

– Press the → button.

– Start the engine.

– Raise the vehicle.

– Remove the noise insulation. Refer to ⇒ Body Exterior; Rep. Gr. 50 ; Noise Insulation .

– Place the Drip Tray or Used Oil Collection and Extraction Unit - SMN372500- under the transmission.

– Press the → button.

If the test temperature 35 ° to 45 °C (95 ° to 113 °F) is displayed:

– Remove the ATF check plug from the ATF pan.

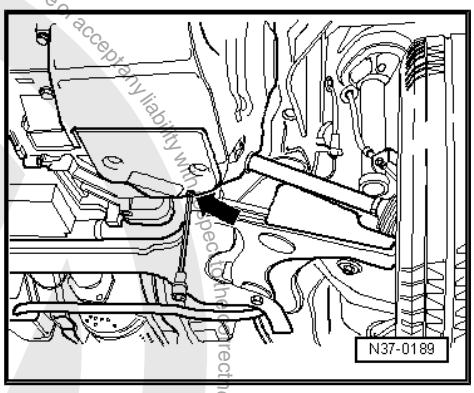

ATF flows out of the overflow pipe.

If ATF Continues to Leak Out of Hole

ATF does not need to be topped off.

– Tighten the ATF check plug with a new gasket to 27 Nm. The ATF level test is now completed.

If No Oil Drips Out of the Hole

– Fill with ATF. Refer to ⇒ “11.2 ATF, Filling”, page 114

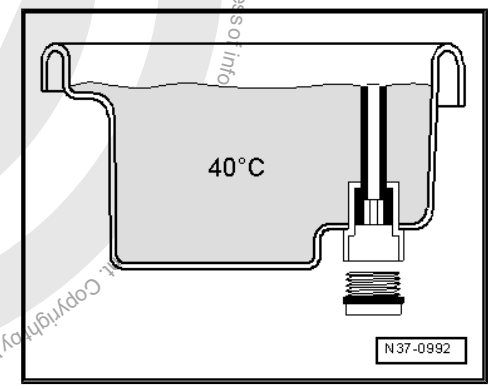

11.2 ATF, Filling

Procedure

- Place the Drip Tray or Used Oil Collection and Extraction Unit - SMN372500- under the transmission.

Protected by copyright. Copyright by Volkswagen AG. Volkswagen AG does not guarantee or accept any liability with respect to the correctness of information. Copyright by Volkswagen AG.

– Install the Oil Filler - Adapter 2 - VAS6262/2- hand-tight, with the engine »running«.

– Shake the fluid containers before opening.

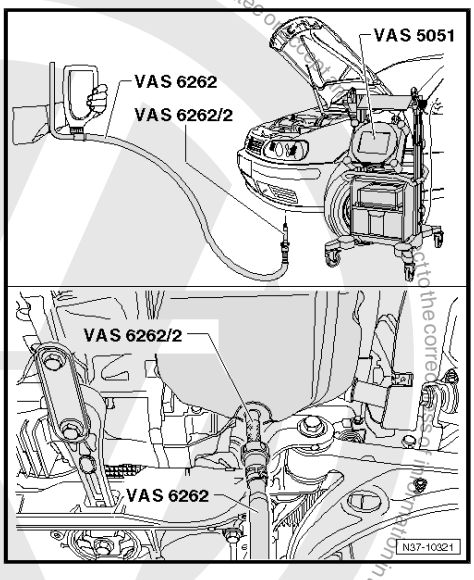

> **Caution**
>
> *The ATF filler tool must be clean and the ATF must not be mixed with any other ATF.*
>
> *Refer to the Parts Catalog for the allocation.*

– Attach the Oil Filler - VAS6262A- to the oil bottle. Be sure to read the instructions. Refer to ⇒ page 112 .

– Fill one liter (1.05 quarts) of ATF.

– Remove the Oil Filler - VAS6262A- at the quick-release coupling and check it.

If ATF Flows Out of Adapter Hole

ATF does not need to be topped off.

– Allow ATF to drain until it drips.

– Tighten the ATF check plug with a new gasket to 27 Nm. The ATF level test is now completed.

If the ATF Does Not Drip

– Fill another liter. Refer to ⇒ “11.2 ATF, Filling”, page 114 .

> **WARNING**
>
> *Too little or too much ATF will impair transmission function. If two liters (2.1 quarts) are missing, the transmission should be checked more closely. There is probably a »larger« leak.*

11.3 ATF, Draining and Filling

Procedure

– Turn off the engine.

• Place the Drip Tray or Used Oil Collection and Extraction Unit - SMN372500- under the transmission.

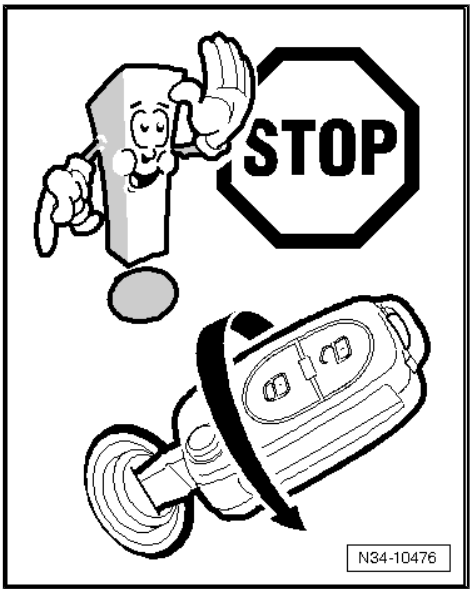

Protected by copyright. Copying for private or commercial purposes, in part or in whole, is not permitted unless authorised by Volkswagen AG. Volkswagen AG does not guarantee or accept any liability with respect to the correctness and completeness of this document. Copyright by Volkswagen AG.

Protected by copyright. Copying for private or commercial purposes, in part or in whole, is not permitted unless authorised by Volkswagen AG. Volkswagen AG does not guarantee or accept any liability with respect to the correctness of information in this document. Copyright by Volkswagen AG.

– Remove the ATF check plug from the ATF pan -arrow-.

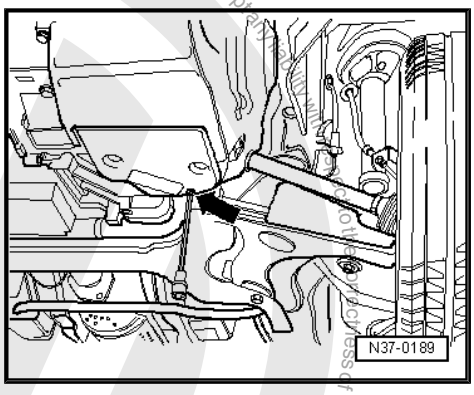

– Remove the overflow pipe -1- through the check hole.
– Let the ATF drain.
– Install the overflow pipe.
– Attach the Oil Filler - VAS6262A- to the oil bottle. At the same time pay attention to the instructions. Refer to ⇒ page 112 .

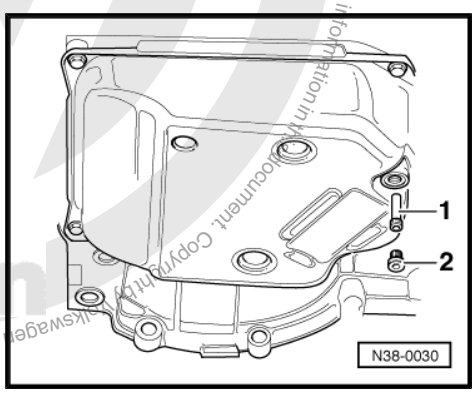

– Install the Oil Filler - Adapter 2 - VAS6262/2- hand-tight in the ATF-check hole.
– Fill with three liters (3.1 quarts) of ATF. Refer to the Parts Catalog.

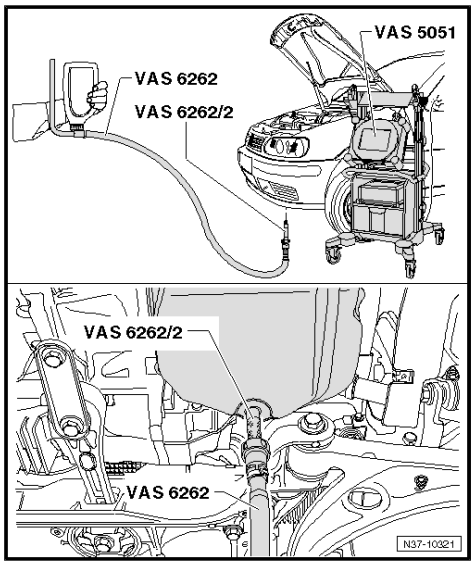

Note

For some »older« transmissions with filling tube -arrow- the ATF can be filled through the filling tube.

– Remove the Oil Filler - Adapter 2 - VAS6262/2- from the oil pan and tighten the ATF check plug with the old seal.
– Move the selector lever into “P” position.
– Start the engine, shift through all the selector lever positions. Leave the selector lever in each position for approximately 10 seconds.
– Check the ATF level and add if necessary. Refer to ⇒ “11 ATF Level, Checking and Filling”, page 112 .

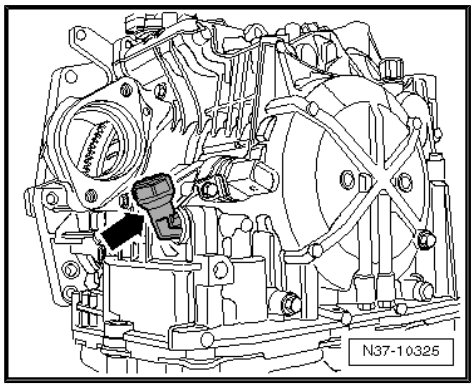

12 Special Tools

Special tools and workshop equipment required

- Engine and Gearbox Jack - VAS6931-
- Torque Wrench 1332 40-200Nm - VAG1332-
- Transmission Support - 3282-
- Transmission Support - Mounting Plate 36 - 3282/36-
- Hose Clamps - Up To 25mm - 3094-
- Insert Tool - 18mm - T10179-

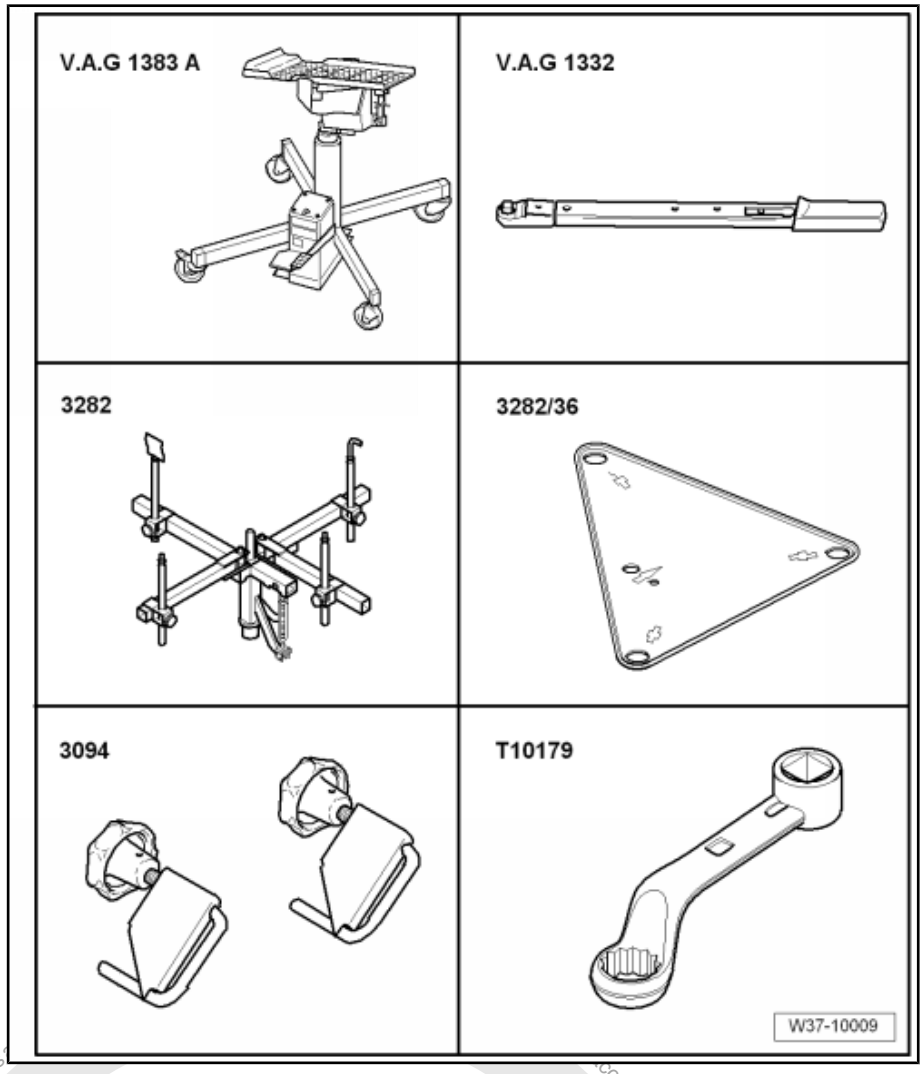

Protected by copyright. Copying for private or commercial purposes, in part or in whole, is not permitted unless ... accept any liability with respect to the correctness of information in this document. Copyright by Volkswagen AG.

Special tools and workshop equipment required

- Engine and Gearbox Jack - VAS6931-
- Socket - Sw15 - V/175-
- Transmission Support - 3282-
- Drive Axle Wedge Tool - T10161-
- Torque Wrench 1332 40-200Nm - VAG1332-
- Transmission Support - Mounting Plate 36 - 3282/36-

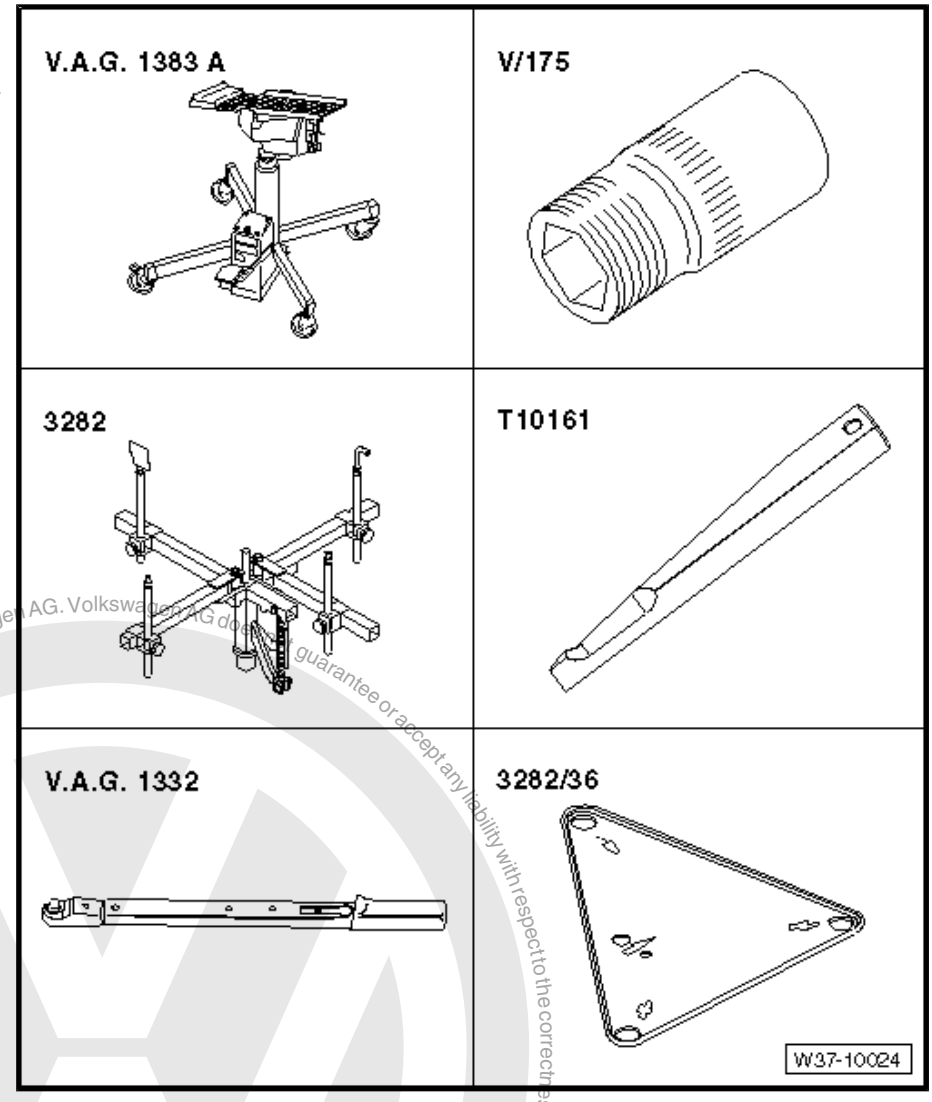

Protected by copyright. Copying for private or commercial purposes, in part or in whole, is not permitted unless authorised by Volkswagen AG. Volkswagen AG does not guarantee or accept any liability with respect to the correctness of information in this document. Copyright by Volkswagen AG.

- Engine Support Bridge - 10-222A-
- Engine Support Bridge - Engine Support Feet - 10-222A/8-
- Engine Support - Automatic Transmission Hook - 10-222A/7-
- Engine Support - Bracket w/Spindle and Hook - 10-222A/10-
- Engine Support Bridge - Engine Support 3 - 10-222A/3-
- Engine/Gearbox Support Shackle (2 pc.) - 10-222A/12-

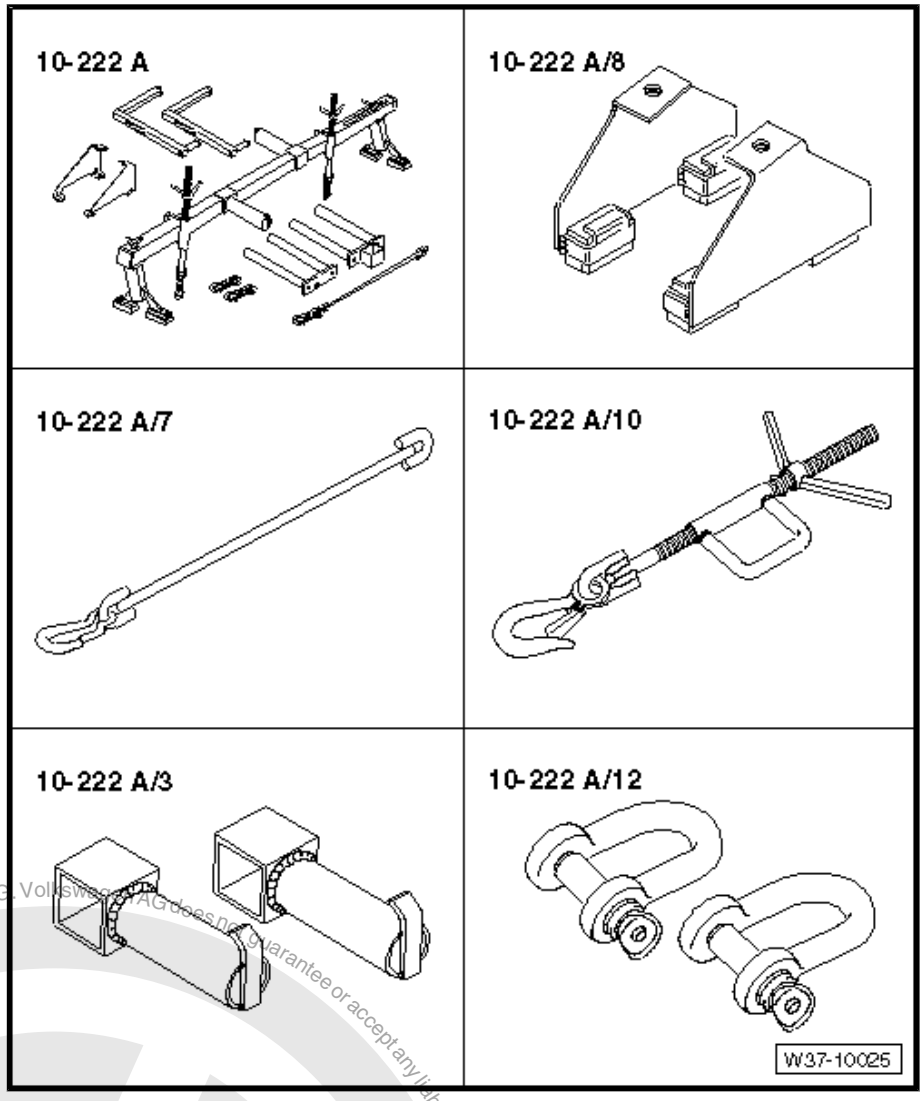

Protected by copyright. Copying for private or commercial purposes, in part or in whole, is not permitted unless authorised by Volkswagen AG. Volkswagen AG does not guarantee or accept any liability with respect to the correctness of information in this document. Copyright by Volkswagen AG.

- Torque Wrench 1331 5-50Nm - VAG1331-
- Used Oil Collection and Extraction Unit - SMN372500-
- Vehicle Diagnostic Tester
- Shop Crane - Drip Tray - VAS6208-
- Oil Filler - VAS6262A-
- Oil Filler - Adapter 2 - VAS6262/2-
- Also for some oil containers Oil Filler - Adapter 6 - VAS6262/6-

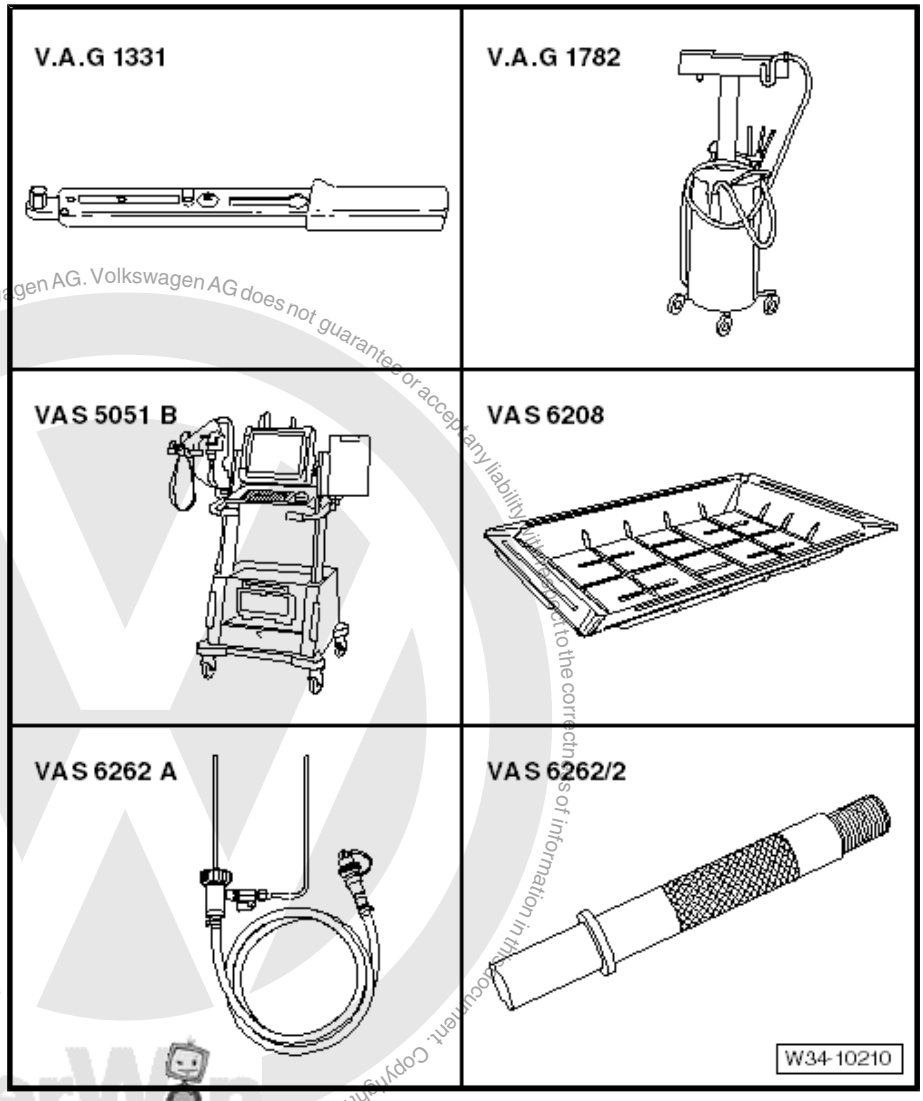

- Tensioning Strap - T10038-

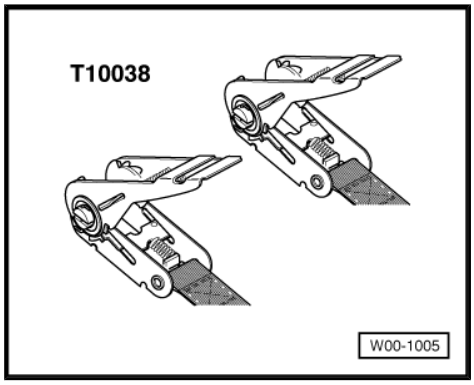

Protected by copyright. Copying for private or commercial purposes, in part or in whole, is not permitted unless authorised by Volkswagen AG. Volkswagen AG does not guarantee or accept any liability with respect to the correctness of information in this document. Copyright by Volkswagen AG.

- Gauge - Multi Function Switch - T10173-

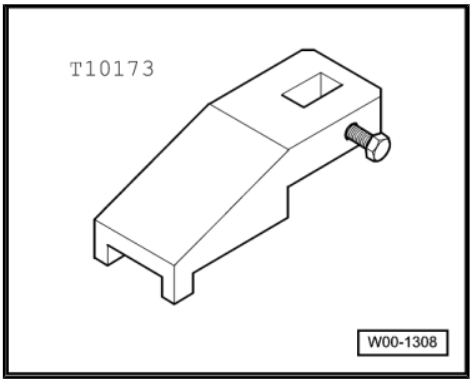

- Engine Support - Basic Set - T40091-

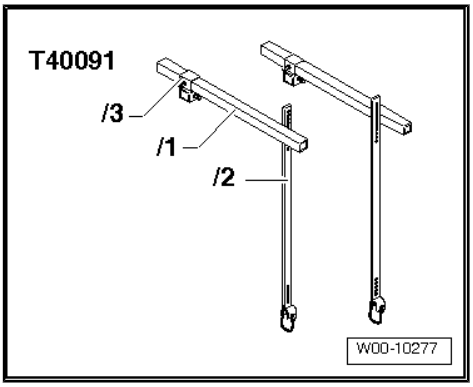

- Socket - Sw15 - V/175-

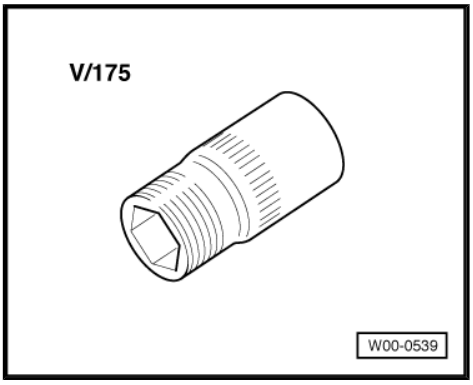

- Torque Wrench 1331 5-50Nm - VAG1331-

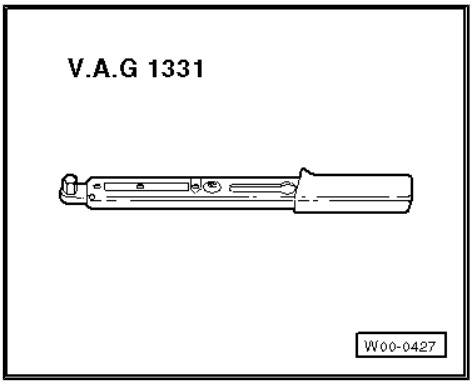

Protected by copyright. Copying for private or commercial purposes, in part or in whole, is not permitted unless authorised by Volkswagen AG. Volkswagen AG does not guarantee or accept any liability with respect to the correctness of information in this document. Copyright by Volkswagen AG.

- Engine And Transmission Holder - VAS6095A-

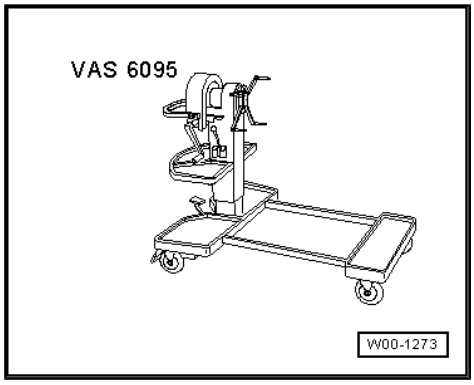

- Shop Crane - VAS6100-

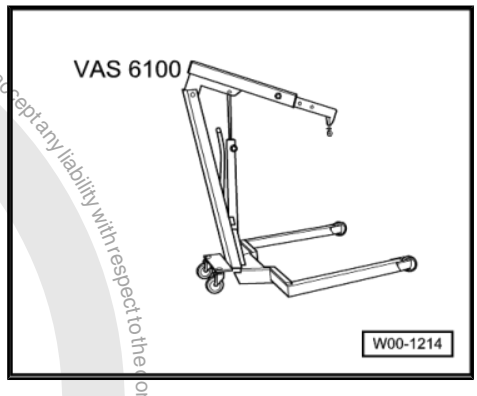

- Holding Fixture - VW313-

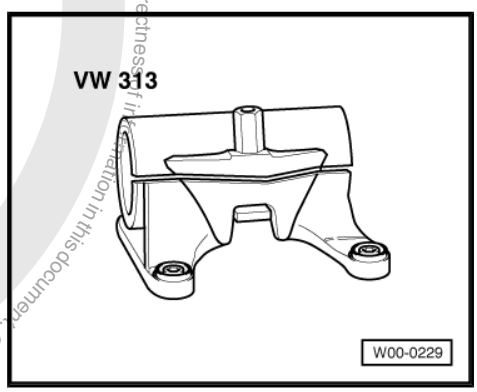

- Holding Fixture - VW540-

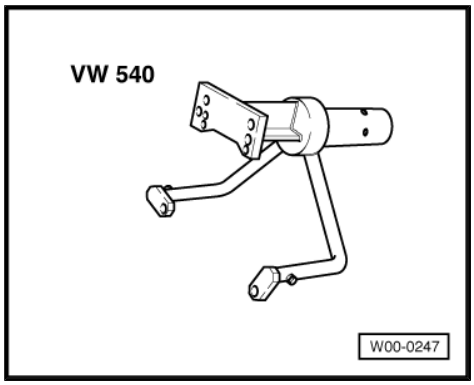

Protected by copyright. Copyright by Volkswagen AG. Volkswagen AG does not guarantee or accept any liability with respect to the correctness of information in this document. Copyright by Volkswagen AG. Copying for private or commercial purposes, in part or in whole, is not permitted unless authorised by Volkswagen AG.

- Engine Support Bridge - 10-222A-

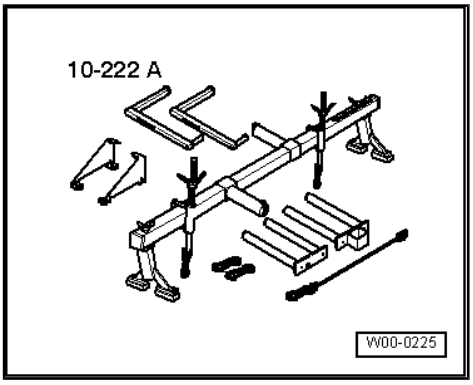

- Engine/Gearbox Support Shackle (2 pc.) - 10-222A/12-

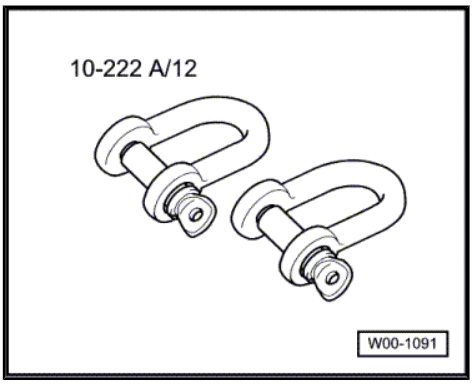

- Engine Support Bridge - Gearbox Adapter - 10-222A/13-

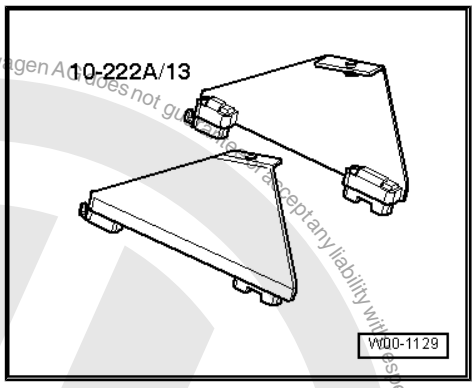

- Hose Clamps - Up To 25mm - 3094-

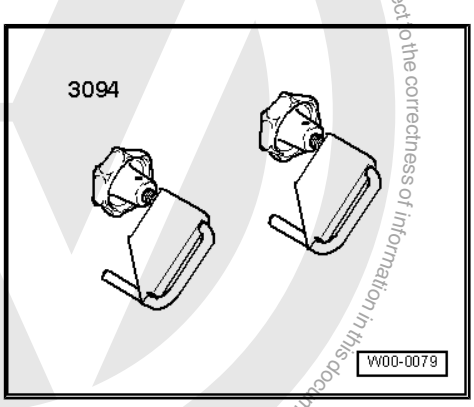

- Tensioning Strap - T10038-

Protected by copyright. Copying for private or commercial purposes, in part or in whole, is not permitted unless authorised by Volkswagen AG. Volkswagen AG does not guarantee or accept any liability with respect to the correctness of information in this document. Copyright by Volkswagen AG.

38 – Gears, Hydraulic Controls

1 Selector Shaft Seal, Replacing

Special tools and workshop equipment required

- Seal Installer - Selector Shaft Oil Seal - T10174-

Removing

– Remove the Multifunction Transmission Range Switch - F125- . Refer to
⇒ “3.1 Multifunction Transmission Range Switch F125 , Removing”, page 20 .

– Remove the selector shaft seal carefully using a screwdriver or the Puller - Crankshaft/Power Steering Seal - T20143- . Do not to damage the selector shaft when doing this.

Installing

– Coat the outer edge of the oil seal and the sealing lips with ATF.

• Installed position: open side of the seal faces the transmission housing.

– Install the new seal all the way using the Seal Installer - Selector Shaft Oil Seal - T10174- . Do not tilt the seal when installing it.

– Install the Multifunction Transmission Range Switch - F125- . Refer to
⇒ “3.2 Multifunction Transmission Range Switch F125 , Installing”, page 21 .

– Adjust the Multifunction Transmission Range Switch - F125- . Refer to
⇒ “3.3 Multifunction Transmission Range Switch F125 , Adjusting”, page 22 .

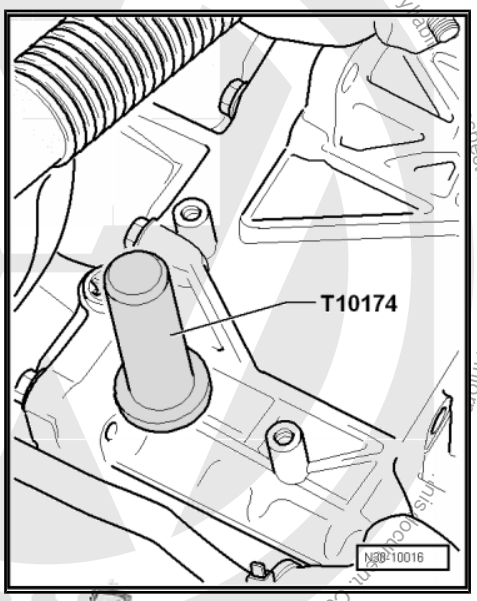

Protected by copyright. Copying for private or commercial purposes, in part or in whole, is not permitted unless authorised by Volkswagen AG. Volkswagen AG does not guarantee or accept any liability with respect to the correctness of information in this document. Copyright by Volkswagen AG.

2 Transmission Fluid Pan

⇒ "2.1 Transmission Fluid Pan, Removing and Installing", page 125

2.1 Transmission Fluid Pan, Removing and Installing

Special tools and workshop equipment required

- Shop Crane - Drip Tray - VAS6208-
- Torque Wrench 1783 - 2-10Nm - VAG1783-

Removing

– Remove the noise insulation. Refer to ⇒ Body Exterior; Rep. Gr. 50 ; Noise Insulation .

– Place the Drip Tray or Used Oil Collection and Extraction Unit - SMN372500- under the transmission.

– Remove the ATF check plug -A-.

– Remove the overflow pipe -C- and drain any remaining ATF.

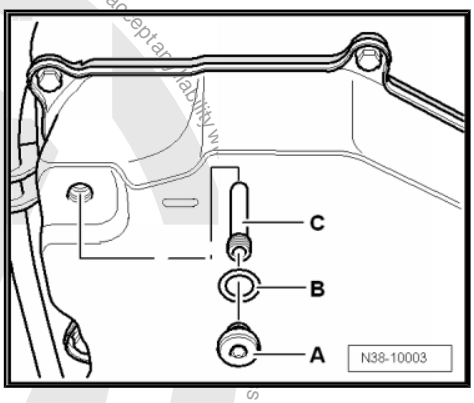

– Loosen the bolts on the ATF pan -arrows- diagonally.

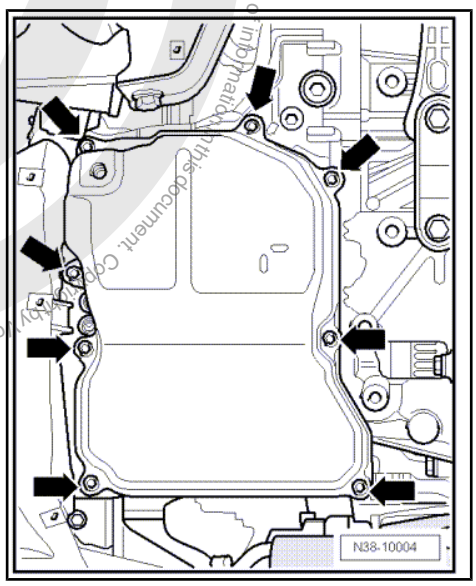

Note

Some residual ATF will remain in the oil pan.

– Remove the ATF pan and gasket.

Installing

Install in reverse order of removal while. Note the following:

– Clean the two magnets in the oil pan depressions. Make sure the magnets touch the oil pan completely.

– Check the seal for damage and make sure all of the spacers (quantity: 8) are present.

Otherwise, replace the seal.

– Insert the oil pan with the seal, when doing this be sure not to pinch any lines.

– Make sure the oil pan seal is seated correctly.

Protected by copyright. Copying for private or commercial purposes, in part or in whole, is not permitted unless authorized by Volkswagen AG. Volkswagen AG does not guarantee or accept any liability w... s or information in this document. Copyright by Volkswagen AG.

– Tighten the ATF pan bolts -arrows- diagonally and in several steps to the tightening specification. Refer to ⇒ “4.1.1 Tightening Specifications”, page 132 .

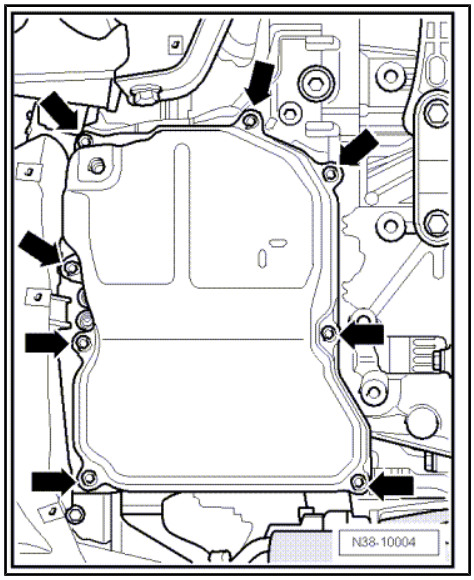

– Install the overflow pipe -C- to the tightening specification. Refer to ⇒ “4.1.1 Tightening Specifications”, page 132 .
– Replace the gasket -B- for the ATF check plug -A-.
– Only install the ATF check plug -A- with a new gasket -B- hand-tight.
– Fill with ATF and check the level. Refer to ⇒ “11 ATF Level, Checking and Filling”, page 112 .
– Install the noise insulation. Refer to ⇒ Body Exterior; Rep. Gr. 50 ; Noise Insulation .

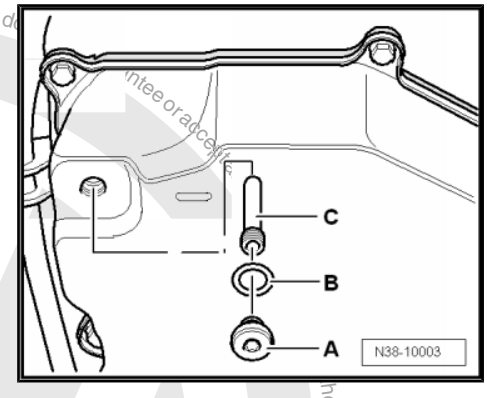

Protected by copyright. Copying for private or commercial purposes, in part or in whole, is not permitted unless authorised by Volkswagen AG. Volkswagen AG does not guarantee or accept any liability with respect to the correctness of information in this document. Copyright by Volkswagen AG.

3 ATF Screen

⇒ “3.1 ATF Screen, Removing and Installing”, page 127

3.1 ATF Screen, Removing and Installing

Removing

– Remove the transmission fluid pan. Refer to ⇒ “2 Transmission Fluid Pan”, page 125 .

– Remove the bolts -arrows- from the ATF screen.

– Remove the ATF screen -A- from the valve body.

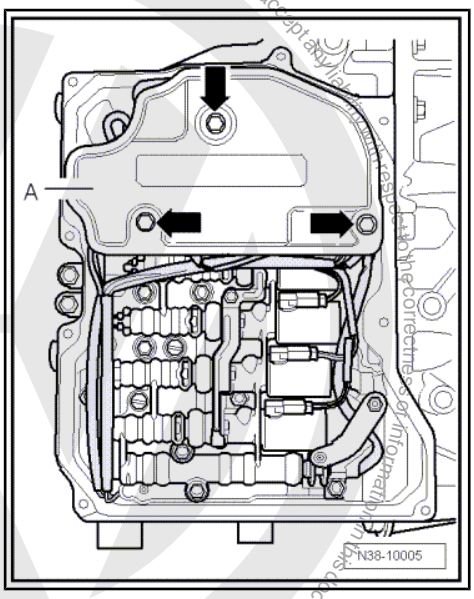

Installing

– Lightly coat the seals on the ATF screen suction collar with ATF.

– Replace the ATF screen if the seals are loose or faulty.

– Mount the ATF screen -A- on the valve body and tighten the bolts -arrows- to the tightening specification. Refer to ⇒ “4.1.1 Tightening Specifications”, page 132 .

– Install the transmission fluid pan. Refer to ⇒ “2 Transmission Fluid Pan”, page 125 .

– Fill with ATF and check the level. Refer to ⇒ “11 ATF Level, Checking and Filling”, page 112 .

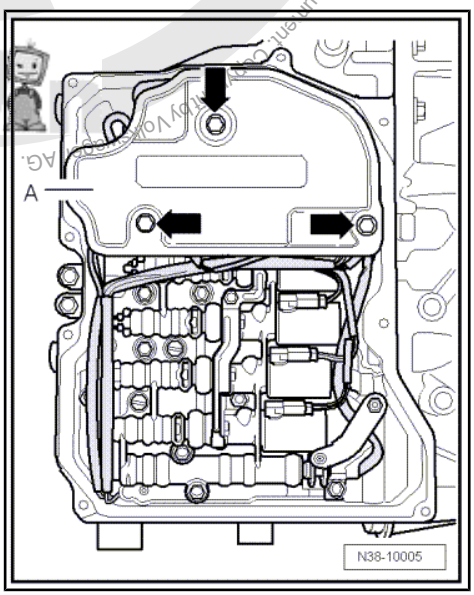

Protected by copyright. Copying for private or commercial purposes, in part or in whole is not permitted unless authorised by Volkswagen AG. Volkswagen AG does not guarantee or accept any liability with respect to the correctness of information in this document.

4 Valve Body

⇒ “4.1 Overview - Valve Body”, page 128

⇒ “4.2 Valve Body, Removing and Installing”, page 135

⇒ “4.3 Solenoid Valve Wiring Harness (14-Pin Connector), Removing and Installing”, page 148

⇒ “4.4 Sensor Wiring Harness (8-Pin Connector), Removing and Installing”, page 149

⇒ “4.5 Transmission Input Speed Sensor G182 , Removing and Installing”, page 150

⇒ “4.6 Transmission Output Speed Sensor G195 , Removing and Installing”, page 151

WARNING

Do not run the engine or tow the vehicle when the ATF pan is removed or when there is no ATF in the transmission.

- The valve bodies and the wiring harnesses can also be removed with the transmission installed.
- Install the O-rings with ATF. Other types of lubrication lead to faults in the transmission control module hydraulics.
- Always replace a contaminated or faulty valve body.
- Only use lint-free cloths
- Check the ATF level after installing the ATF pan. Refer to ⇒ “11 ATF Level, Checking and Filling”, page 112 .

4.1 Overview - Valve Body

⇒ “4.1.2 Wire Routing, Connector, Connectors and Bracket on Valve Body”, page 132

⇒ “4.1.1 Tightening Specifications”, page 132.

Protected by copyright. Copying for private or commercial purposes, in part or in whole, is not permitted unless authorised by Volkswagen AG. Volkswagen AG does not guarantee or accept any liability with respect to the correctness of information in this document. Copyright by Volkswagen AG.

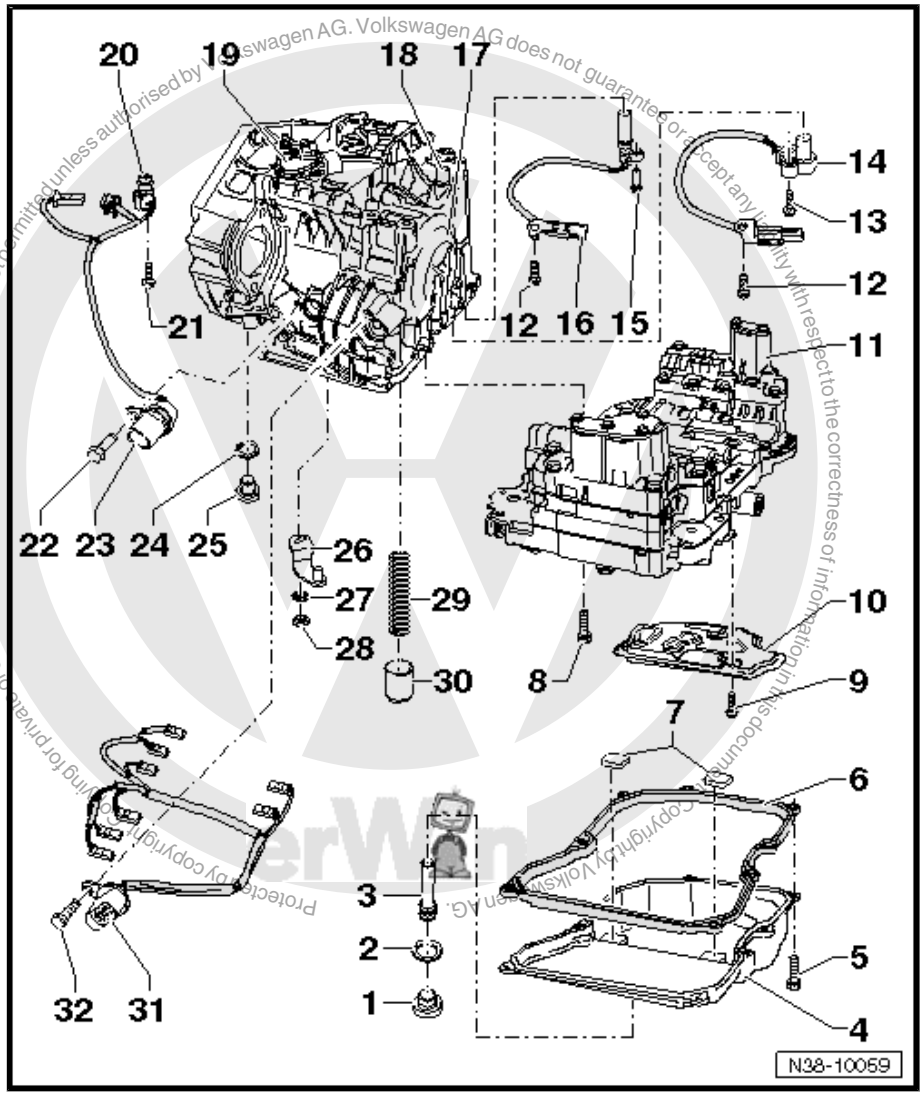

1 - ATF Check Plug

- ❑ ATF level, checking and filling. Refer to ⇒ “11 ATF Level, Checking and Filling”, page 112 .
- ❑ Tightening specification. Refer to ⇒ “4.1.1 Tightening Specifications”, page 132 .

2 - Seal

- ❑ Replace after removing

3 - Overflow Pipe

- ❑ Remove in order to drain the ATF
- ❑ Tightening specification. Refer to ⇒ “4.1.1 Tightening Specifications”, page 132 .

4 - Transmission Fluid Pan

- ❑ Removing and installing. Refer to ⇒ “2 Transmission Fluid Pan”, page 125 .

5 - Bolt

- ❑ Tighten the ATF pan bolts diagonally and in several steps.
- ❑ Tightening specification. Refer to ⇒ “4.1.1 Tightening Specifications”, page 132 .

6 - Seal

- ❑ With spacers (quantity: 8)
- ❑ Check before installing
- ❑ Replace brittle, cracked or deformed seals

7 - Magnet

- ❑ Quantity: 2; in depressions in the ATF pan
- ❑ Clean before installing the ATF pan.

8 - Bolt

- ❑ For fastening the valve body to the transmission
- ❑ Quantity 12; with different lengths ⇒ Fig. ““Bolt Lengths and Component Locations on the Valve Body”“ , page 144
- ❑ Replace after removing
- ❑ Tightening specification. Refer to ⇒ “4.1.1 Tightening Specifications”, page 132 .

9 - Bolt

- ❑ Quantity: 3
- ❑ For attaching the ATF screen to the valve body
- ❑ Tightening specification. Refer to ⇒ “4.1.1 Tightening Specifications”, page 132 .

10 - ATF Screen

- ❑ Removing and installing. Refer to ⇒ “3 ATF Screen”, page 127 .

Protected by copyright. Copyright by Volkswagen AG. Volkswagen AG does not guarantee or accept any liability with respect to the correctness of information in this document. Copying for private or commercial purposes, in part or in whole, is not permitted unless authorised by Volkswagen AG.

11 - Valve Body

- ❑ Removing and installing. Refer to ⇒ “4.2 Valve Body, Removing and Installing”, page 135 .
- ❑ Solenoid valve identification. Refer to ⇒ “4.1.2 Wire Routing, Connector, Connectors and Bracket on Valve Body”, page 132 .
- ❑ Allocation. Refer to the Parts Catalog.

12 - Bolt

- ❑ Tightening specification. Refer to ⇒ “4.1.1 Tightening Specifications”, page 132 .

13 - Bolt

- ❑ Tightening specification. Refer to ⇒ “4.1.1 Tightening Specifications”, page 132 .

14 - Transmission Input Speed Sensor - G182-

- ❑ Removing and installing. Refer to ⇒ “4.5 Transmission Input Speed Sensor G182 , Removing and Installing”, page 150 .

15 - Bolt

- ❑ Tightening specification. Refer to ⇒ “4.1.1 Tightening Specifications”, page 132 .

16 - Transmission Output Speed Sensor - G195-

- ❑ Removing and installing. Refer to ⇒ “4.6 Transmission Output Speed Sensor G195 , Removing and Installing”, page 151 .

17 - Transmission Housing

- ❑ Illustrated here without the ATF cooler

18 - Bleed Cap

19 - Multifunction Transmission Range Switch - F125-

- ❑ Removing and installing. Refer to ⇒ “3 Multifunction Transmission Range Switch F125 ”, page 20 .
- ❑ Adjusting. Refer to ⇒ “3.3 Multifunction Transmission Range Switch F125 , Adjusting”, page 22 .

20 - Transmission Fluid Temperature Sensor - G93-

- ❑ Integrated inside the sensor wiring harness -item 23- ⇒ Item 23 (page 130) .
- ❑ Removing and installing. Refer to ⇒ “4.3 Solenoid Valve Wiring Harness (14-Pin Connector), Removing and Installing”, page 148 .
- ❑ Wire routing. Refer to ⇒ “4.1.2 Wire Routing, Connector, Connectors and Bracket on Valve Body”, page 132

21 - Bolt

- ❑ Tightening specification. Refer to ⇒ “4.1.1 Tightening Specifications”, page 132 .

22 - Bolt

- ❑ Tightening specification. Refer to ⇒ “4.1.1 Tightening Specifications”, page 132 .

23 - Sensor Wiring Harness

- ❑ With connector
- ❑ With an O-ring on the connector; always replace the O-ring
- ❑ With Transmission Fluid Temperature Sensor - G93-
- ❑ For the Transmission Input Speed Sensor - G182-
- ❑ For the Transmission Output Speed Sensor - G195-
- ❑ Removing and installing. Refer to ⇒ “4.4 Sensor Wiring Harness (8-Pin Connector), Removing and Installing”, page 149 .
- ❑ Wire routing. Refer to ⇒ “4.1.2 Wire Routing, Connector, Connectors and Bracket on Valve Body”, page 132
- ❑ Allocation. Refer to the Parts Catalog.

24 - Seal

- ❑ if present, replace after removing

25 - ATF Drain Plug

- ❑ Not installed on all transmissions
- ❑ Tightening specification. Refer to ⇒ “4.1.1 Tightening Specifications”, page 132 .

Protected by copyright. Copyright by Volkswagen AG. Volkswagen AG does not guarantee or assume any liability with respect to the correctness of information in this document. Copying for private or commercial purposes, in part or in whole, is not permitted unless authorised by Volkswagen AG.

26 - Gearshift Lever

- ❑ For the selector shaft
- ❑ inside, on the valve body
- ❑ Removing and installing. Refer to ⇒ “4.2 Valve Body, Removing and Installing”, page 135 .

27 - Washer

28 - Nut

- ❑ Installed position: the centering bushing faces the washer -item 27- ⇒ Item 27 (page 131)
- ❑ Tightening specification. Refer to ⇒ “4.1.1 Tightening Specifications”, page 132 .

29 - Spring

- ❑ If equipped
- ❑ Allocation. Refer to the Parts Catalog.

30 - Damper Piston

- ❑ If equipped
- ❑ Allocation. Refer to the Parts Catalog.

31 - Solenoid Valve Wiring Harness

- ❑ With 14-pin connector
- ❑ With an O-ring on the connector; always replace the O-ring
- ❑ Component locations of the solenoid valves and wiring harness routing. Refer to ⇒ “4.1.2 Wire Routing, Connector, Connectors and Bracket on Valve Body”, page 132 .
- ❑ Removing and installing. Refer to ⇒ “4.3 Solenoid Valve Wiring Harness (14-Pin Connector), Removing and Installing”, page 148 .

32 - Bolt

- ❑ Tightening specification. Refer to ⇒ “4.1.1 Tightening Specifications”, page 132 .

Protected by copyright. Copying for private or commercial purposes, in part or in whole, is not permitted unless authorised by Volkswagen AG. Volkswagen AG does not guarantee or accept any liability with respect to the correctness of information in this document. Copyright by Volkswagen AG.

4.1.1 Tightening Specifications

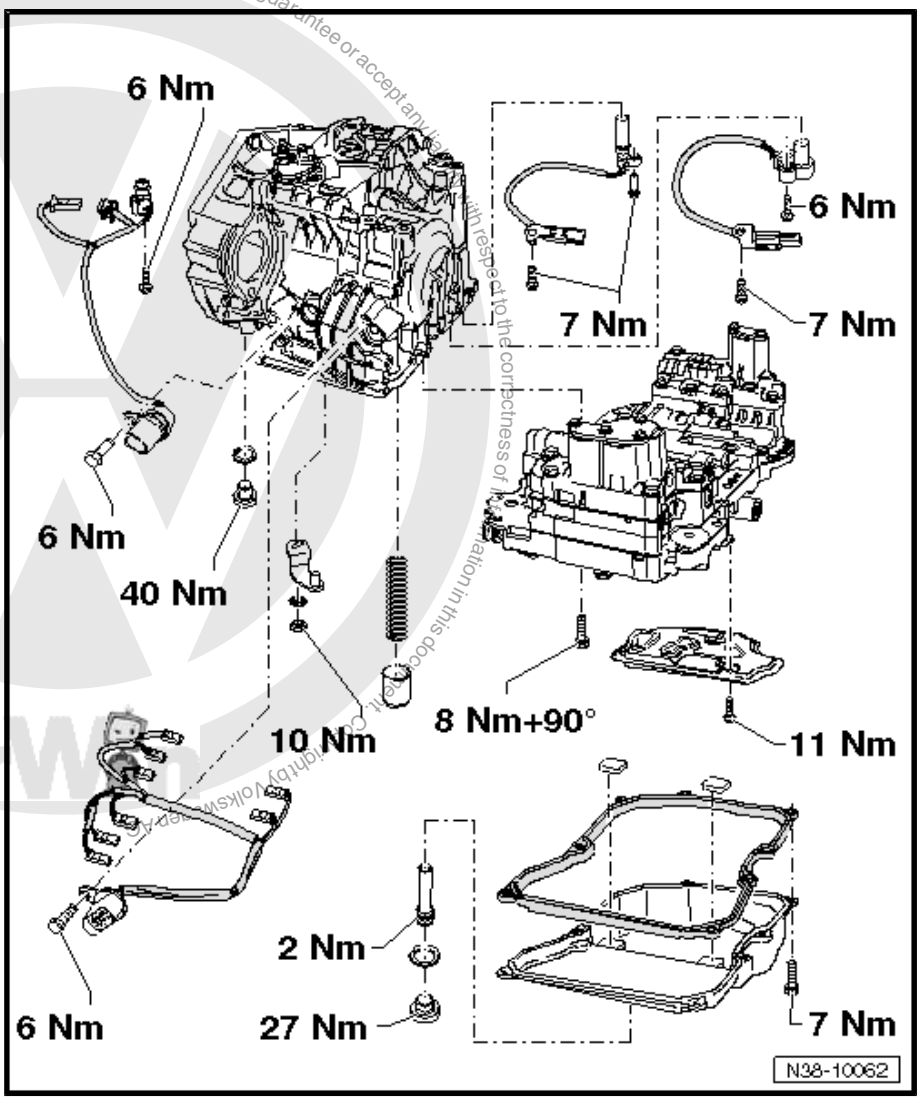

4.1.2 Wire Routing, Connector, Connectors and Bracket on Valve Body

In this chapter, the information regarding assembly work on the valve body is shown in illustrations.

Vehicles with a generation 2 transmission (such as transmission codes “MAN” or “PDW”)

Vehicles with generation 3 transmission (such as transmission code “NTJ”)

Wire Routing, Connector and Connectors - Vehicles with Generation 2 Transmission. Refer to ⇒ page 132 **.**

Note

- *In this chapter, the information regarding assembly work on the valve body is shown in illustrations.*
- *Mark the solenoid valve and/or sensor and its connector before disconnecting them.*

Protected by copyright. Copying for private or commercial purposes, in part or in whole, is not permitted unless authorised by Volkswagen AG. Volkswagen AG does not guarantee or accept any liability with respect to the correctness of information in this document. Copyright by Volkswagen AG.

1 - Solenoid Valve 4 - N91-

2 - Solenoid Valve 6 - N93-

3 - Solenoid Valve 5 - N92-

4 - Solenoid Valve 9 - N282-

5 - Solenoid Valve 10 - N283-

6 - Solenoid Valve 3 - N90-

7 - Solenoid Valve 1 - N88-

8 - Solenoid Valve 2 - N89-

A - Transmission Output Speed Sensor - G195- Connector

B - Transmission Input Speed Sensor - G182- Connector

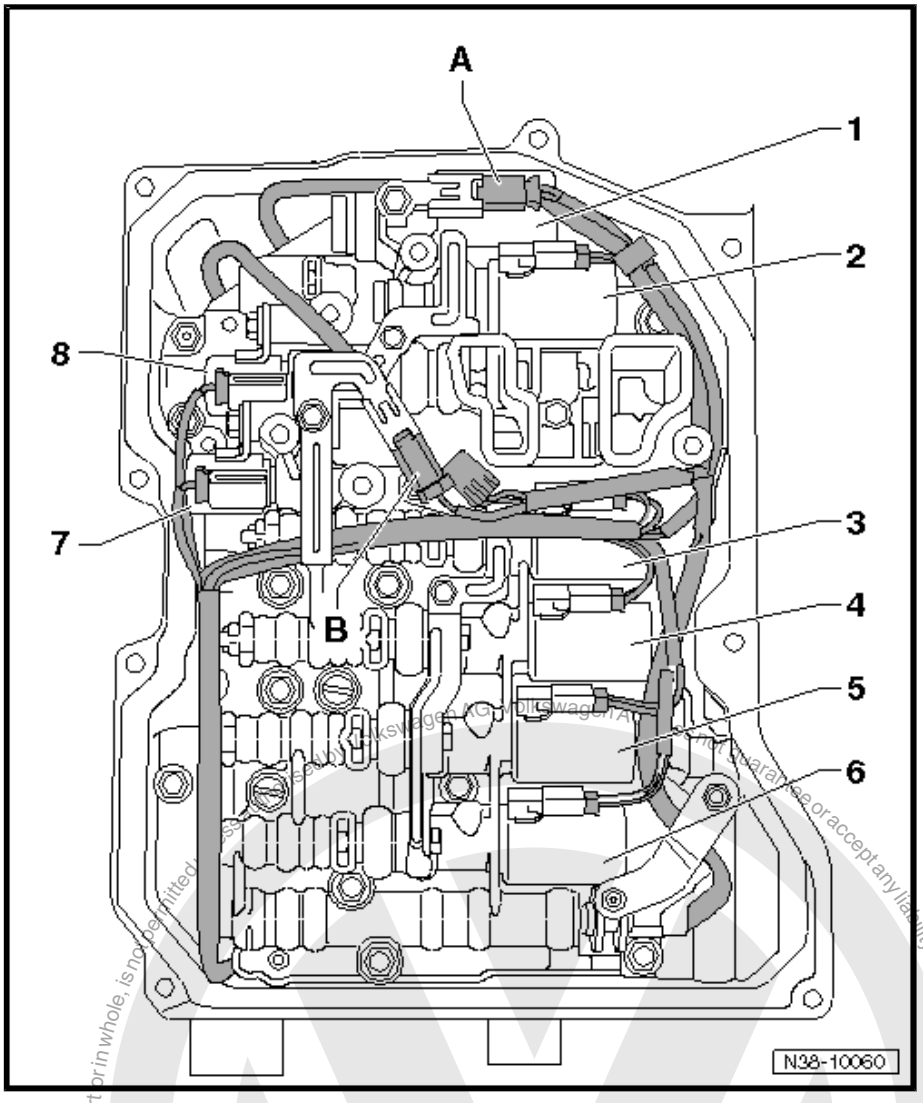

Bracket for Connectors, Securing the Wires

Note

The -arrows- in the illustration point to the wire brackets or the secured wires.

Protected by copyright. Copying for private or commercial purposes, in part or in whole, is not permitted unless authorized by Volkswagen AG. Volkswagen AG does not guarantee or accept any liability with respect to the correctness of information in this document. Copyright by Volkswagen AG.

1 - Bracket for the Transmission Output Speed Sensor - G195- Connector

- ❑ Tightening specification. Refer to ⇒ “4.1.1 Tightening Specifications”, page 132 .

2 - Bracket for the Transmission Input Speed Sensor - G182- Connector

- ❑ Tightening specification. Refer to ⇒ “4.1.1 Tightening Specifications”, page 132 .

3 - Transmission Fluid Temperature Sensor - G93-

4 - Gearshift Lever

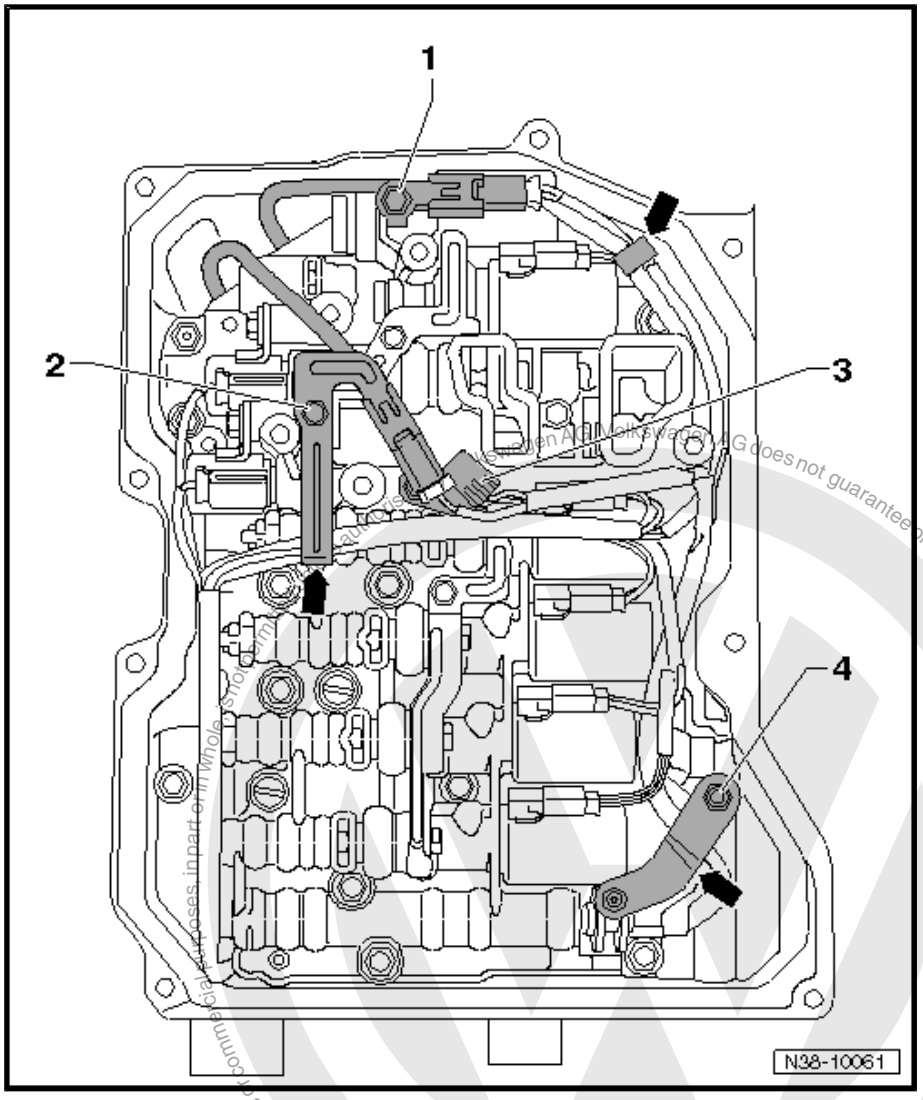

Wire Routing, Connector and Connectors - Vehicles with Generation 3 Transmission. Refer to ⇒ page 132 .

Note

- *In this chapter, the information regarding assembly work on the valve body is shown in illustrations.*
- *Mark the solenoid valve and/or sensor and its connector before disconnecting them.*

Protected by copyright. Copying for private or commercial purposes, in part or in whole, is not permitted unless authorized by Volkswagen AG. Volkswagen AG does not guarantee or accept any liability with respect to the correctness of information in this document. Copyright by Volkswagen AG.

1 - Solenoid Valve 1 - N88-

2 - Solenoid Valve 2 - N89-

3 - Automatic Transmission Pressure Regulating Valve 5 - N233-

4 - Automatic Transmission Pressure Regulating Valve 7 - N443-

5 - Automatic Transmission Pressure Regulating Valve 1 - N215-

6 - Automatic Transmission Pressure Regulating Valve 4 - N218-

7 - Automatic Transmission Pressure Regulating Valve 3 - N217-

8 - Automatic Transmission Pressure Regulating Valve 2 - N216-

A - Transmission Fluid Temperature Sensor - G93-

B - Transmission Input Speed Sensor - G182- Connector

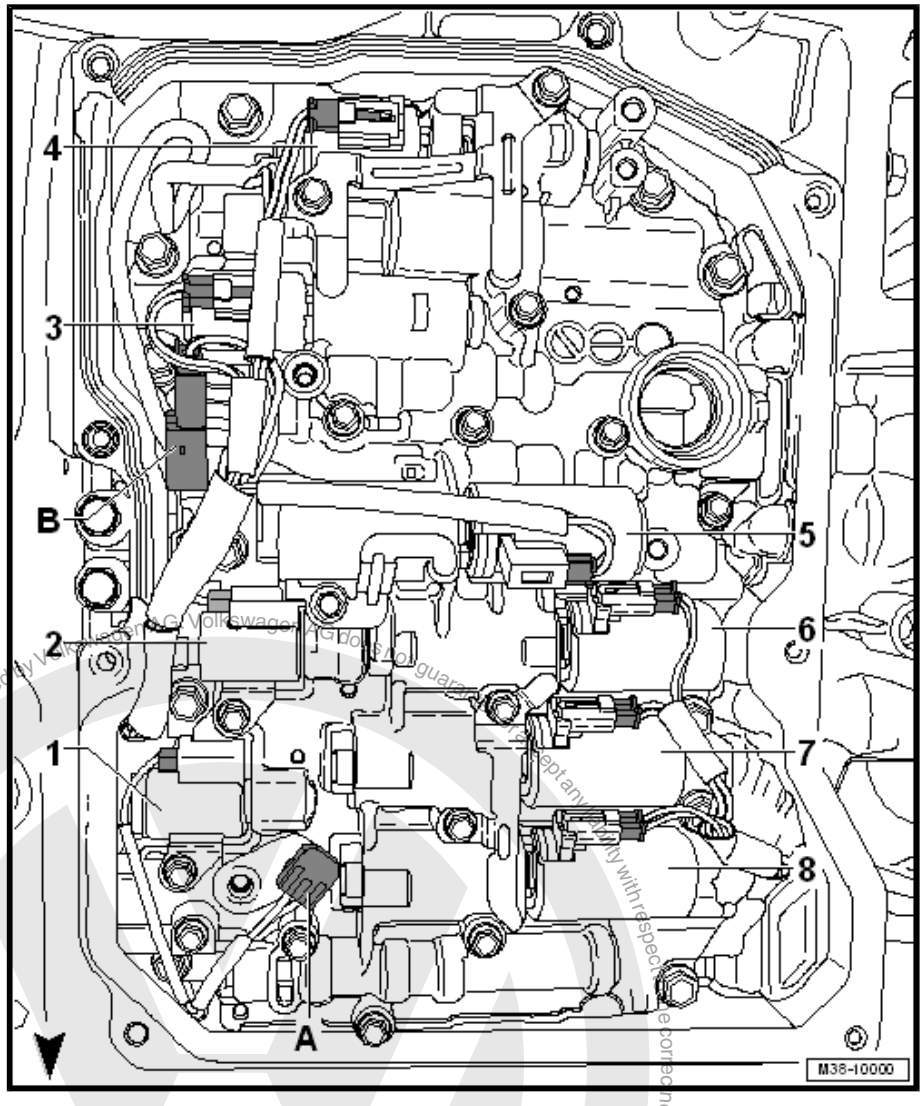

4.2 Valve Body, Removing and Installing

Special tools and workshop equipment required

- Torque Wrench 1331 5-50Nm - VAG1331-
- Digital Torque Wrench - VAG1756A-

Removing

Vehicles with a generation 2 transmission (such as transmission codes “MAN” or “PDW”)

Vehicles with generation 3 transmission (such as transmission code “NTJ”)

Removing on Vehicles with Generation 2 Transmission. Refer to ⇒ page 135 .

– See if a coded radio is installed. If so, obtain the anti-theft code.

– Disconnect the battery ground cable. Refer to ⇒ Electrical Equipment; Rep. Gr. 27 ; Battery; Battery, Disconnecting and Connecting .

– Remove the transmission fluid pan. Refer to ⇒ “2 Transmission Fluid Pan”, page 125 .

– Remove the ATF screen. Refer to
⇒ “3 ATF Screen”, page 127 .

– Make a sketch, similar to the illustration, of all the sensors and solenoid valves and their connectors.

– Mark the solenoid valve and/or sensor and its connector before disconnecting them.

> ⚠ **WARNING**
>
> *It is absolutely required to draw or take pictures and to make identifying marks so that connectors at solenoid valves cannot be interchanged unintentionally when reinstalling the sensors and valve body.*
>
> *In some circumstances, confusing the connectors could cause damage to the transmission.*

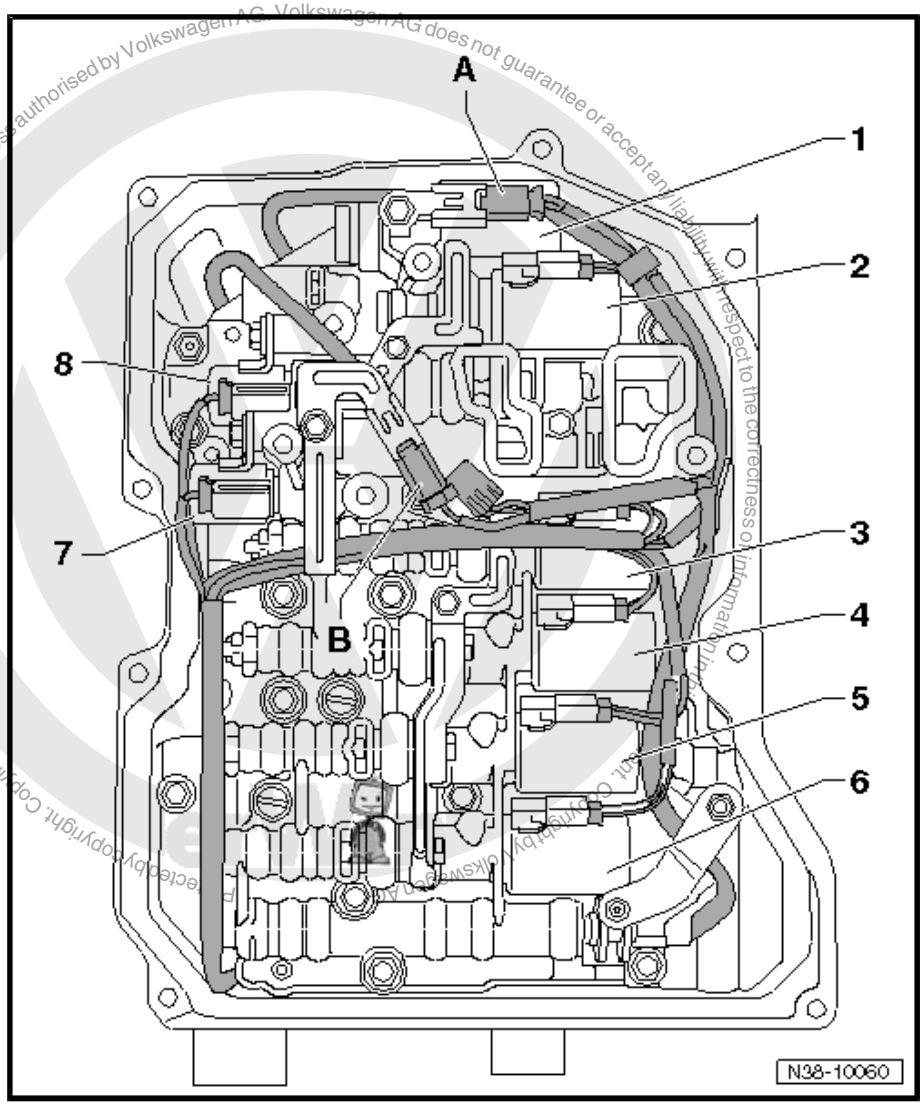

Volkswagen AG. Volkswagen AG does not guarantee or accept any liability with respect to the correctness of information. Copyright by Volkswagen AG. Protected by copyright. Copying for private or commercial purposes, in part or in whole, is not permitted unless authorised by Volkswagen AG.

– Carefully pry out the connector retaining tabs on the solenoid valves -1 through 8- using a small screwdriver and then disconnect the connectors.

Caution

The wiring harness or the valve body with the solenoid valves must be replaced if the one of the connectors gets damaged.

– Disconnect the connectors -A and B-.

Note

If equipped, remove the connectors from the Automatic Transmission Hydraulic Pressure Sensor 1 - G193- and the Automatic Transmission Hydraulic Pressure Sensor 2 - G194- . Refer to
⇒ Fig. "" Automatic Transmission Hydraulic Pressure Sensor 1 -G193- and Automatic Transmission Hydraulic Pressure Sensor 2 -G194- "", page 18 .

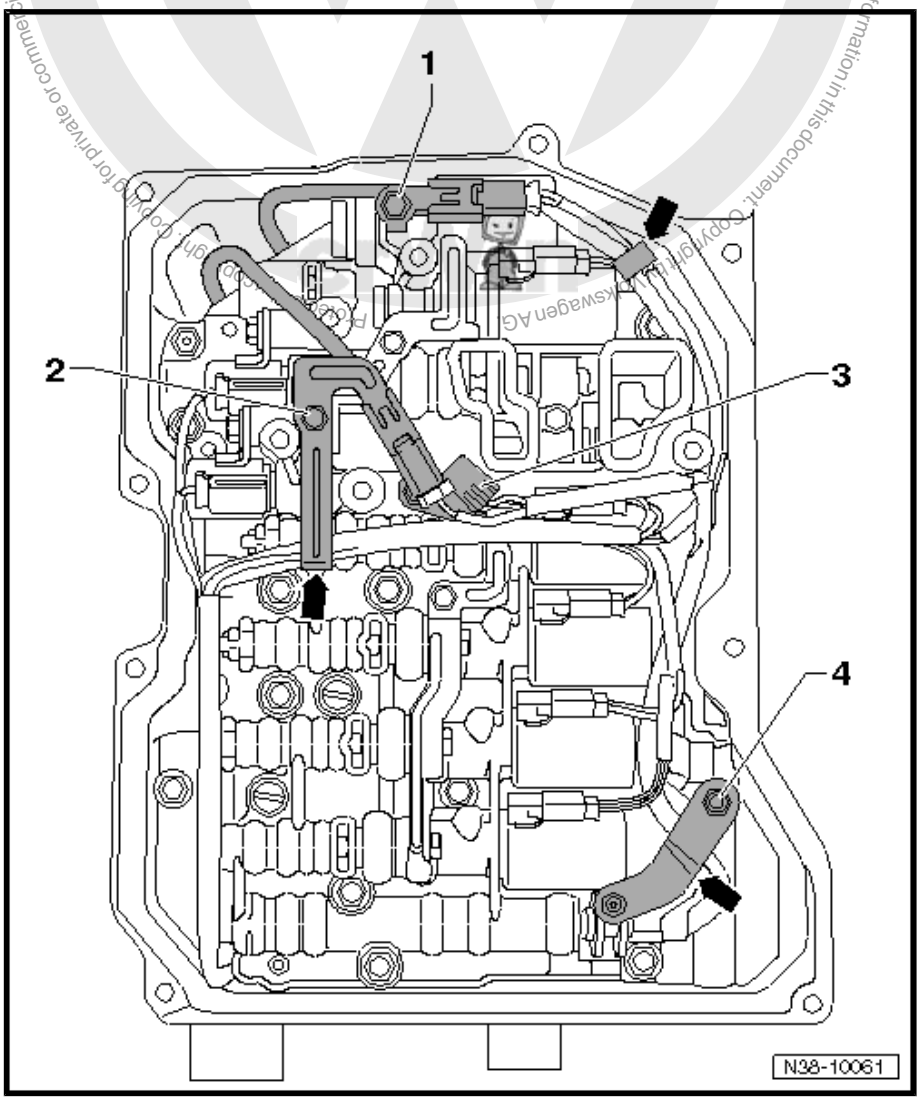

– Remove the bracket for the connectors -1 and 2-.

– Remove the Transmission Fluid Temperature Sensor - G93- -3- carefully from the valve body.

– Disengage the wiring harnesses from the brackets -arrows-.

– If equipped, bend the locking plate on the selector lever back -arrows-.

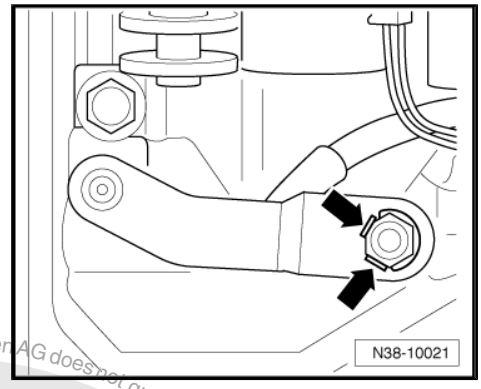

– Remove the selector lever -1- from the selector shaft.
– While doing so, carefully hold the selector lever -1- firmly with pliers -2- so that the torque is not transferred onto the Multi-function Transmission Range Switch - F125- .
– Make sure the slider -3- on the valve body in which the shift lever engages is not damaged.

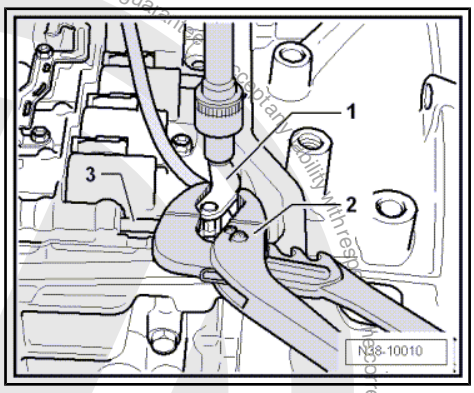

The actuator valve is very »sensitive«. Even minor damage leads to malfunction.

– Always slide the valve into the body, secure it against falling out and never interchange it.

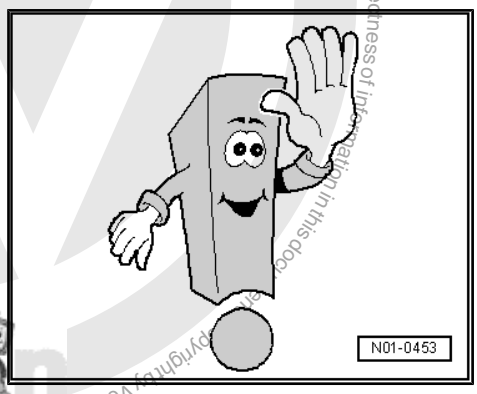

The valve body bolts on the transmission housing have different lengths and must be replaced.

Only the indicated bolts -arrows- may be loosened.

> **Caution**
>
> ***When loosening the other bolts, the function of the valve body can be impaired or the valve body will distort.***

– Remove the bracket -1 and 2-.
– Loosen the valve body bolts -arrows-, -arrows A- and -arrows B- diagonally and then remove the valve body.

-3- valve body description, for example, A2

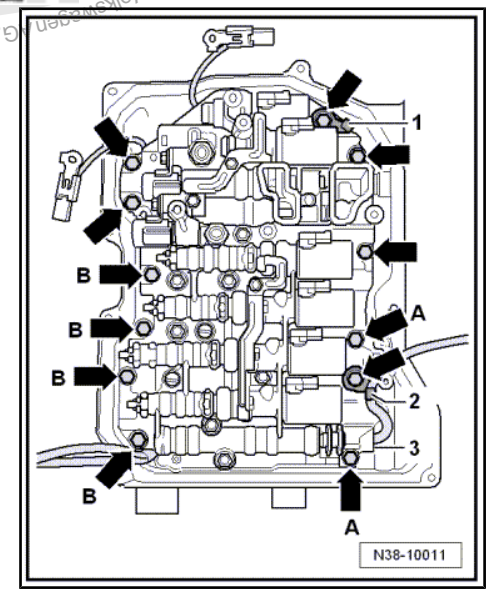

Protected by copyright. Copying for private or commercial purposes, in part or in whole, is not permitted unless authorised by Volkswagen AG. Volkswagen AG does not guarantee or accept any liability with respect to the correctness of information in this document. Copyright by Volkswagen AG.

– When removing the valve body, it may be necessary to protect the damper piston -2- against falling out or remove it with the spring.

Removing on Vehicles with Generation 3 Transmission. Refer to ⇒ page 135 .

– See if a coded radio is installed. If so, obtain the anti-theft code.

– Disconnect the battery ground cable. Refer to ⇒ Electrical Equipment; Rep. Gr. 27 ; Battery; Battery, Disconnecting and Connecting .

– Remove the transmission fluid pan. Refer to ⇒ “2 Transmission Fluid Pan”, page 125 .

– Remove the ATF screen. Refer to ⇒ “3 ATF Screen”, page 127 .

– Make a sketch, similar to the illustration, of all the sensors and solenoid valves and their connectors.

– Mark the solenoid valve and/or sensor and its connector before disconnecting them.

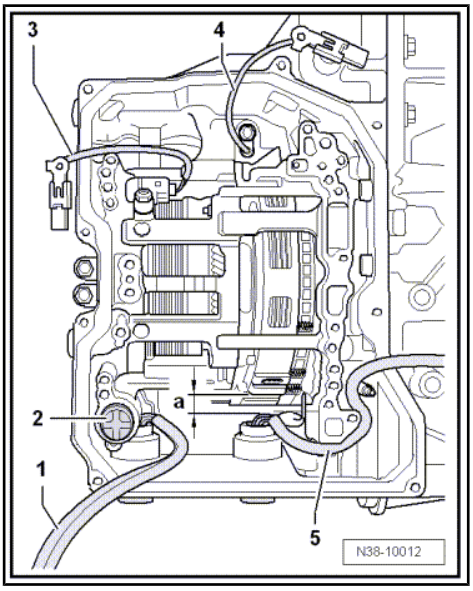

WARNING

It is absolutely required to draw sketches or take pictures and to make identifying marks so that connectors at solenoid valves cannot be interchanged unintentionally when reinstalling the sensors and valve body.

In some circumstances, confusing the connectors could cause damage to the transmission.

Protected by copyright. Copying for private or commercial purposes, in part or in whole, is not permitted unless authorised by Volkswagen AG. Volkswagen AG does not guarantee or accept any liability with respect to the correctness of information in this document. Copyright by Volkswagen AG.

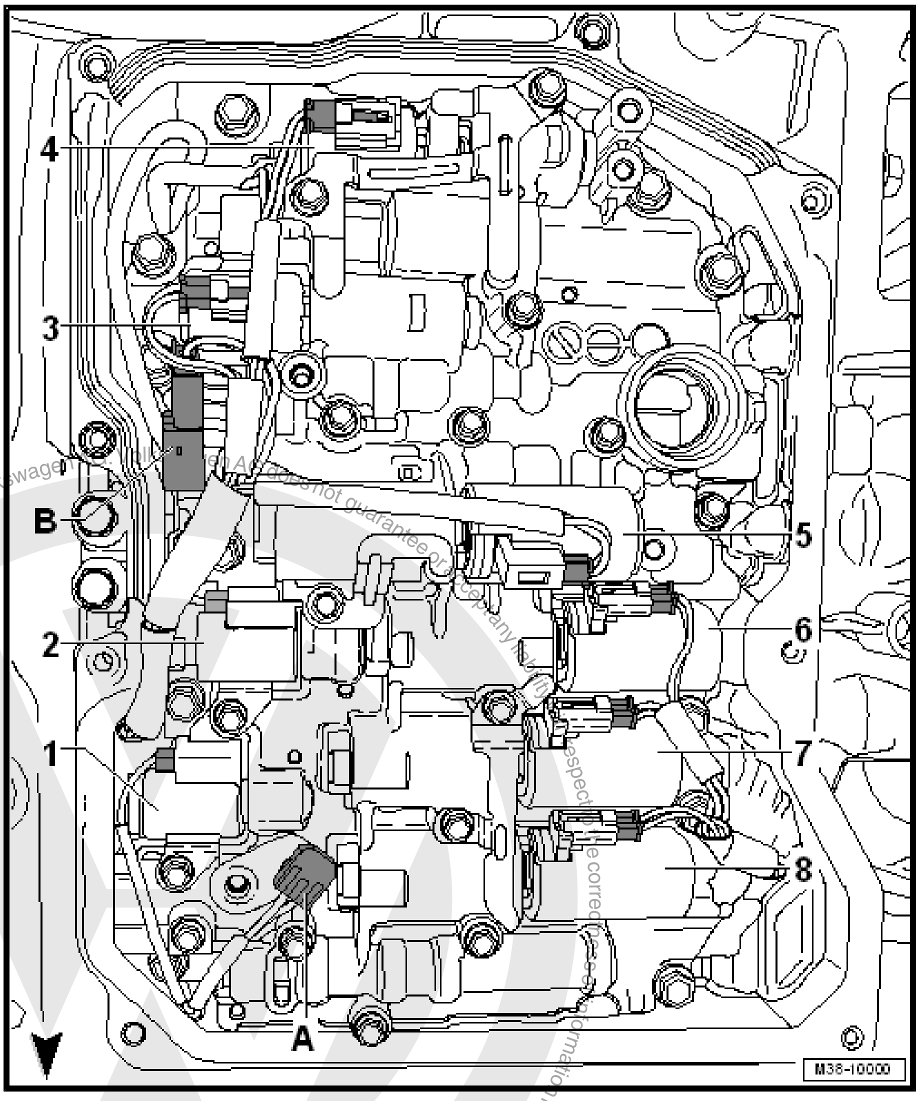

– Carefully pry out the connector retaining tabs on the solenoid valves -1 through 8- using a small screwdriver and then disconnect the connectors.

Caution

The wiring harness or the valve body with the solenoid valves must be replaced if the one of the connectors gets damaged.

– Disconnect the connector -B-.

Note

If equipped, remove the connectors from the Automatic Transmission Hydraulic Pressure Sensor 1 - G193- and the Automatic Transmission Hydraulic Pressure Sensor 2 - G194- . Refer to *⇒ Fig. "" Automatic Transmission Hydraulic Pressure Sensor 1 -G193- and Automatic Transmission Hydraulic Pressure Sensor 2 -G194- "", page 18* .

– Remove the Transmission Fluid Temperature Sensor - G93- -A- carefully from the valve body.

Protected by copyright. Copying for private or commercial purposes, in part or in whole, is not permitted unless authorised by Volkswagen AG. Volkswagen AG does not guarantee or accept any liability with respect to the correctness of information in this document. Copyright by Volkswagen AG.

– If equipped, bend the locking plate on the selector lever back -arrows-.

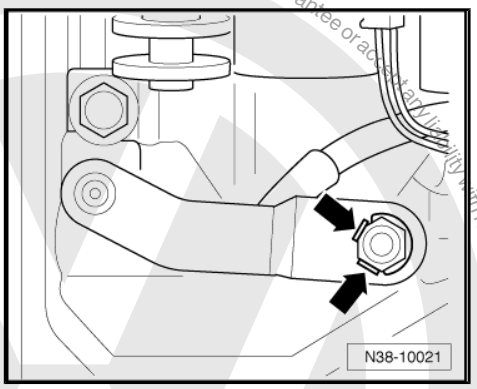

– Remove the selector lever -1- from the selector shaft.
– While doing so, carefully hold the selector lever -1- firmly with pliers -2- so that the torque is not transferred onto the Multi-function Transmission Range Switch - F125- .
– Make sure the slider -3- on the valve body in which the shift lever engages is not damaged.

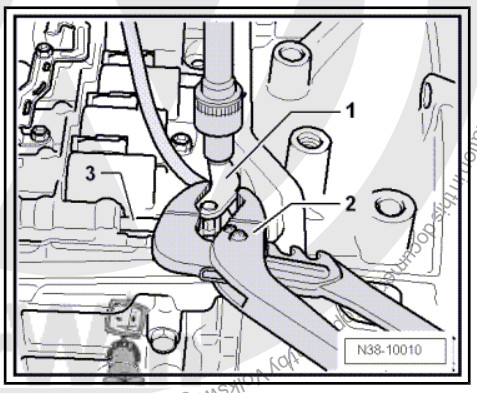

The actuator valve is very »sensitive«. Even minor damage leads to malfunction.

– Always slide the valve into the body, secure it against falling out and never interchange it.

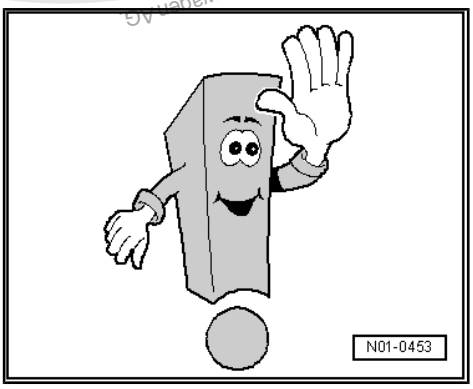

Protected by copyright. Copying for private or commercial purposes, in part or in whole, is not permitted unless authorised by Volkswagen AG. Volkswagen AG does not guarantee or accept any liability with respect to the correctness of information in this document.

The valve body bolts on the transmission housing have different lengths and must be replaced.

Only the indicated bolts -arrows- may be loosened.

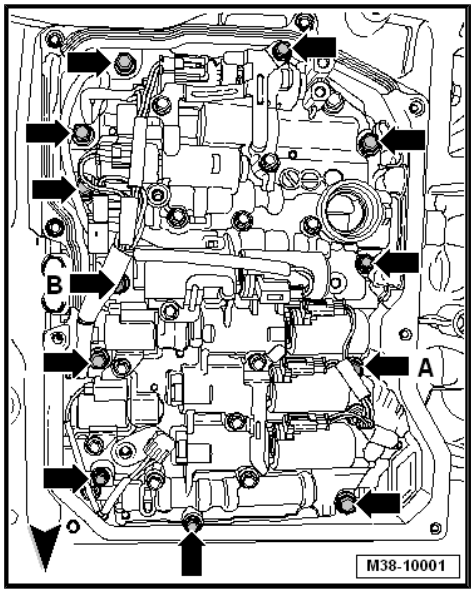

> **Caution**
>
> ***When loosening the other bolts, the function of the valve body can be impaired or the valve body will distort.***

– Loosen the valve body bolts -arrows-, -arrows A- and -arrows B- diagonally and then remove the valve body.

Installing

Vehicles with a generation 2 transmission (such as transmission codes “MAN” or “PDW”)

Vehicles with generation 3 transmission (such as transmission code “NTJ”)

Procedure on Vehicles with Generation 2 Transmission. Refer to ⇒ page 142 **.**

– Observe the exact wire routing so that they do not become pinched when installing the valve body.

– Route the wiring harness -5- into the transmission as illustrated.

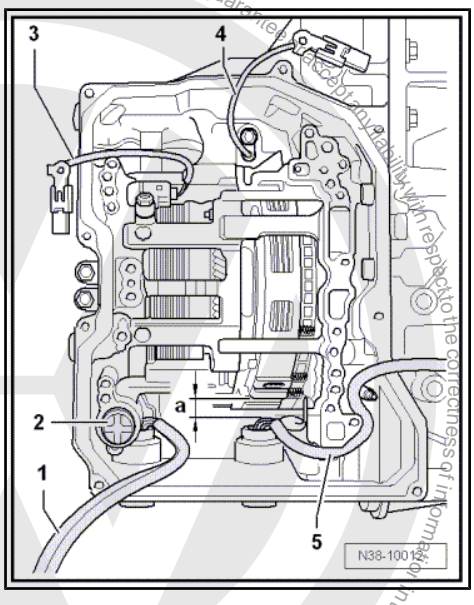

The distance -a- must be maintained so that the wiring harness -5- does not touch the planetary gear and get damaged when the vehicle is being driven.

– Place the wiring harnesses -1, 3, 4 and 5- over the edge of the transmission according to the illustration.

– Attach the wiring harnesses to the transmission with tape.

– Coat the damper piston -2- with ATF and then insert it with the spring into the transmission housing, as illustrated.

– Mount the valve body and install the two bolts hand-tight.

Protected by copyright. Copying for private or commercial purposes, in whole or in part, is not permitted unless authorised by Volkswagen AG. Volkswagen AG does not guarantee or accept any liability with respect to the correctness of information in this document. Copyright by Volkswagen AG.

- The wiring harnesses -1, 3, 4 and 5- must not get caught by the valve body.

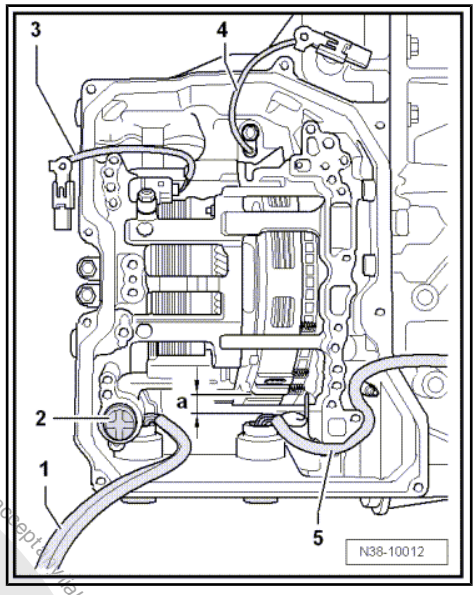

Protected by copyright. Copying for private or commercial purposes, in part or in whole, is not permitted unless authorised by Volkswagen AG. Volkswagen AG does not guarantee or accept any liability with respect to the correctness of information in this document. Copyright by Volkswagen AG.

Bolt Lengths and Component Locations on the Valve Body

Bolts -arrows-	Quantity 6, M 6 × 21
Bolts -arrows A-	Quantity 2, M 6 x 16
Bolts -arrows B-	Quantity 4, M 6 x 28

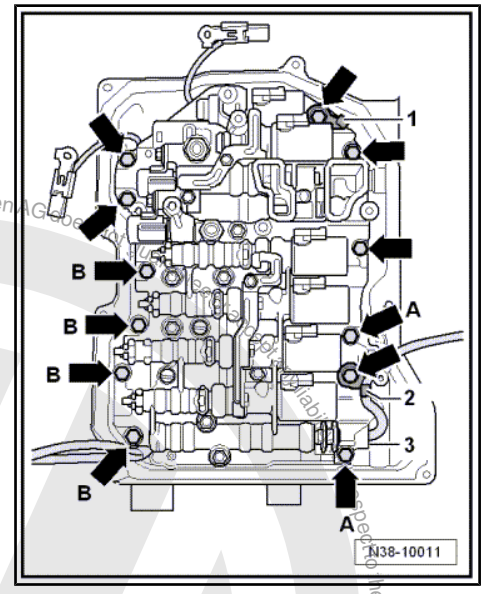

– Install the remaining new bolts -1- and the bracket -2-, tighten hand-tight.

Note

- *If the wires are too short to be connected to the sensors or attached to the designated location on the valve body, then they were routed incorrectly or are pinched by the valve body. The valve body must be removed again and wires must be routed correctly.*
- *Replace all the valve body bolts.*

– Tighten the valve body starting from the inside and working out diagonally to the tightening specification. Refer to ⇒ “4.1.1 Tightening Specifications”, page 132 .

– Install the Transmission Fluid Temperature Sensor - G93- to the tightening specification. Refer to ⇒ “4.1.1 Tightening Specifications”, page 132 .

– Connect the connectors (quantity: 8) to the solenoid valves according to the markings made earlier. Refer to ⇒ “4.1.2 Wire Routing, Connector, Connectors and Bracket on Valve Body”, page 132 .

Caution

In some circumstances, confusing the connectors could cause damage to the transmission.

The wiring harness or the valve body with the solenoid valves must be replaced if the one of the connectors gets damaged.

– Tighten the bracket for the connectors. Refer to ⇒ page 133 and ⇒ “4.1.1 Tightening Specifications”, page 132 for the tightening specification.

– Connect the connectors -item A- ⇒ Item A (page 133) and -item B- ⇒ Item B (page 133) .

– If equipped, connect the connectors vertically to Automatic Transmission Hydraulic Pressure Sensor 1 - G193- and Automatic Transmission Hydraulic Pressure Sensor 2 - G194- -4-, if equipped. Refer to ⇒ Fig. “” Automatic Transmission Hydraulic Pressure Sensor 1 -G193- and Automatic Transmission Hydraulic Pressure Sensor 2 -G194- ”“ , page 18 .

Copyright by Volkswagen AG. Copying for private or commercial purposes, in part or in whole, is not permitted unless authorized by Volkswagen AG. Volkswagen AG does not guarantee or assume any liability for the correctness of information in this document.

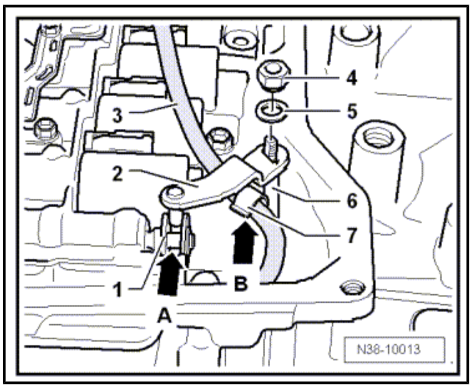

- Engage the wiring harness -3- in the bracket -7- -arrow B-.
- Attach the selector lever -2- to the selector shaft -6-.

Make sure the pin on the selector lever -2- engages into the slider -1- -arrow A-. Position the slider if necessary.

- Install the washer -5- and nut -4- on the selector shaft -6-.

The collar on the nut must always face the washer and fit into the washer when the nut is tightened.

The wiring harness must be routed underneath the selector shaft lever.

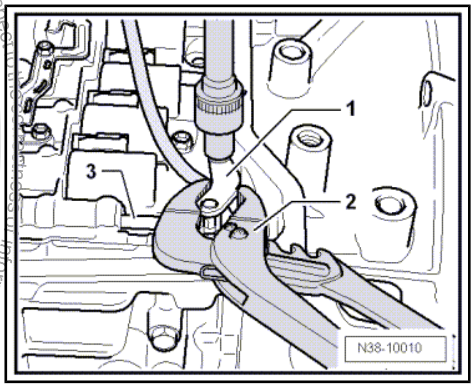

- Tighten the nut on the selector lever -1- to the tightening specification. Refer to ⇒ “4.1.1 Tightening Specifications”, page 132 .
- While doing so, carefully hold the selector lever -1- firmly with pliers -2- so that the torque is not transferred onto the Multifunction Transmission Range Switch - F125- .
- Make sure the slider -3- on the valve body in which the shift lever engages is not damaged.

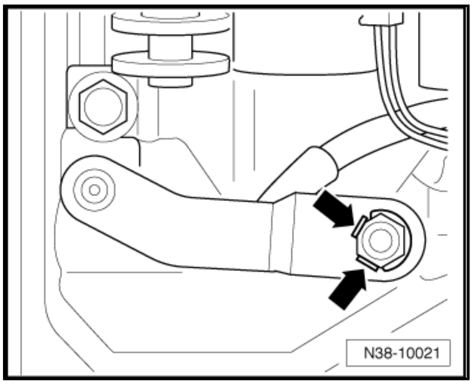

- Bend up the locking plate at the nuts -arrows-, if equipped.
- Install the ATF screen. Refer to ⇒ “3 ATF Screen”, page 127 .
- Install the transmission fluid pan. Refer to ⇒ “2 Transmission Fluid Pan”, page 125 .
- Connect the battery ground cable. Refer to ⇒ Electrical Equipment; Rep. Gr. 27 ; Battery; Battery, Disconnecting and Connecting .
- Fill with ATF and check the level. Refer to ⇒ “11 ATF Level, Checking and Filling”, page 112 .
- Install the noise insulation. Refer to ⇒ Body Exterior; Rep. Gr. 50 ; Noise Insulation .
- Connect the Vehicle Diagnostic Tester and select “function/ component selection”.
- Then press “Powertrain (Repair Group 01; 10 to 26; 28 to 39)”.
- Then the “6-speed automatic transmission 09G”.
- Press “01 - OBD”.
- Press “Functions”.
- Press “basic setting”.

Procedure on Vehicles with Generation 3 Transmission. Refer to **⇒ page 142** **.**

- Observe the exact wire routing so that they do not become pinched when installing the valve body.

Protected by copyright. Copying for private or commercial purposes, in part or in whole, is not permitted unless authorised by Volkswagen AG. Volkswagen AG does not guarantee or accept any liability with respect to the correctness of information in this document. Copyright by Volkswagen AG.

– Route the wiring harness -5- into the transmission as shown.

The distance -a- must be maintained so that the wiring harness -5- does not touch the planetary gear and get damaged when the vehicle is being driven.

– Place the wiring harnesses -1 to 5- over the edge of the transmission according to the illustration.

– Attach the wiring harnesses to the transmission with tape.

– Mount the valve body and install the two bolts hand-tight.

• The wiring harnesses -1 to 5- must not get pinched by the valve body.

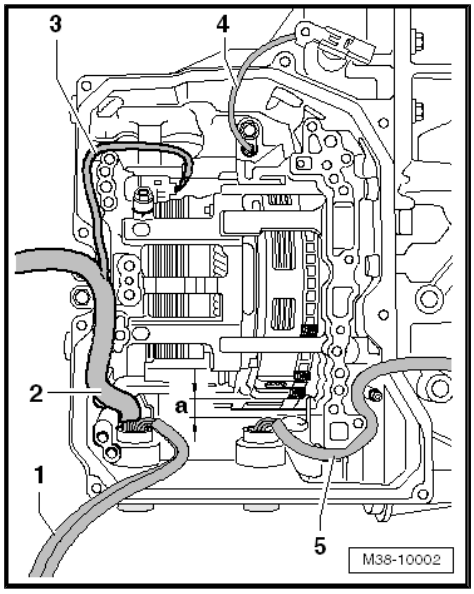

Protected by copyright. Copying for private or commercial purposes, in part or in whole, is not permitted unless authorised by Volkswagen AG. Volkswagen AG does not guarantee or accept any liability with respect to the correctness of information in this document. Copyright by Volkswagen AG.

Bolt Lengths and Component Locations on the Valve Body

Bolts -arrows-	Quantity 10, M 6 × 21
Bolts -arrows A-	Quantity 1, M 6 x 16
Bolts -arrows B-	Quantity 1, M 6 × 28

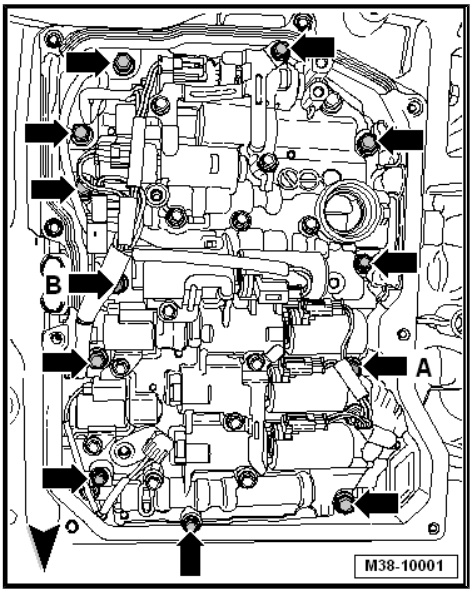

– Install the remaining new bolts and the bracket and tighten hand-tight.

Note

- *If the wires are too short to be connected to the sensors or attached to the designated location on the valve body, then they were routed incorrectly or are pinched by the valve body. The valve body must be removed again and wires must be routed correctly.*
- *Replace all the valve body bolts.*

– Tighten the valve body starting from the inside and working out diagonally to the tightening specification. Refer to ⇒ “4.1.1 Tightening Specifications”, page 132 .

– Install the Transmission Fluid Temperature Sensor - G93- to the tightening specification. Refer to ⇒ “4.1.1 Tightening Specifications”, page 132 .

– Connect the connectors (quantity: 8) to the solenoid valves according to the markings made earlier. Refer to ⇒ “4.1.2 Wire Routing, Connector, Connectors and Bracket on Valve Body”, page 132 .

Caution

In some circumstances, confusing the connectors could cause damage to the transmission.

The wiring harness or the valve body with the solenoid valves must be replaced if the one of the connectors gets damaged.

– Tighten the bracket for the connectors. Refer to ⇒ page 133 and ⇒ “4.1.1 Tightening Specifications”, page 132 for the tightening specification.

– Push the connectors together ⇒ Item B (page 135) .

– If equipped, connect the connectors vertically to Automatic Transmission Hydraulic Pressure Sensor 1 - G193- and Automatic Transmission Hydraulic Pressure Sensor 2 - G194- -4-, if equipped. Refer to ⇒ Fig. “‘‘ Automatic Transmission Hydraulic Pressure Sensor 1 -G193- and Automatic Transmission Hydraulic Pressure Sensor 2 -G194- ’’“ , page 18 .

Protected by copyright. Copying for private or commercial purposes, in part or in whole, is not permitted unless authorised by Volkswagen AG. Volkswagen AG does not guarantee or accept any liability with respect to the correctness of information in this document. Copyright by Volkswagen AG.

– Engage the wiring harness -3- in the bracket -7- -arrow B-.

– Attach the selector lever -2- to the selector shaft -6-.

Make sure the pin on the selector lever -2- engages into the slider -1- -arrow A-. Position the slider if necessary.

– Install the washer -5- and nut -4- on the selector shaft -6-.

The centering collar on the nut must face the washer and fit into the washer when the nut is tightened.

The wiring harness must be routed underneath the selector shaft lever.

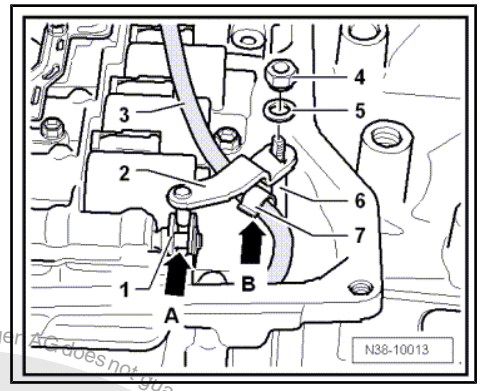

– Tighten the nut on the selector lever -1- to the tightening specification. Refer to
⇒ “4.1.1 Tightening Specifications”, page 132 .

– While doing so, carefully hold the selector lever -1- firmly with pliers -2- so that the torque is not transferred onto the Multi-function Transmission Range Switch - F125- .

– Make sure the slider -3- on the valve body in which the shift lever engages is not damaged.

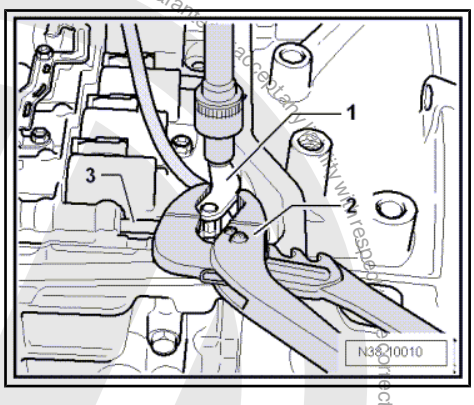

– Bend up the locking plate at the nuts -arrows-, if equipped.

– Install the transmission fluid screen. Refer to
⇒ “3 ATF Screen”, page 127 .

– Install the transmission fluid pan. Refer to
⇒ “2 Transmission Fluid Pan”, page 125 .

– Connect the battery ground cable. Refer to ⇒ Electrical Equipment; Rep. Gr. 27 ; Battery; Battery, Disconnecting and Connecting .

– Fill the ATF and check the level. Refer to
⇒ “11 ATF Level, Checking and Filling”, page 112 .

– Install the noise insulation. Refer to ⇒ Body Exterior; Rep. Gr. 50 ; Noise Insulation; Overview - Noise Insulation .

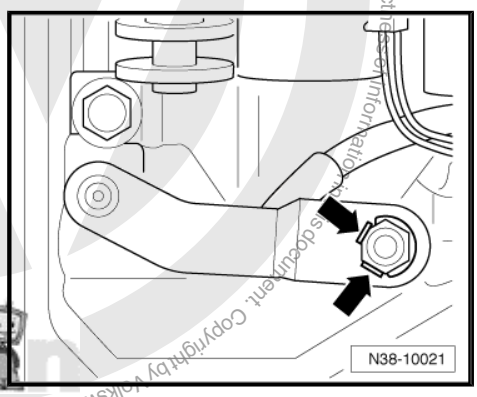

– Connect the Vehicle Diagnostic Tester ⇒ Vehicle diagnostic tester and select “function/component selection”.

– Then press “Powertrain (Repair Group 01; 10 to 26; 28 to 39)”.

– Then the “6-speed automatic transmission 09G”.

– Press “01 - OBD”.

– Press “Functions”.

– Press “basic setting”.

4.3 Solenoid Valve Wiring Harness (14-Pin Connector), Removing and Installing

Removing

– Drain the ATF. Refer to
⇒ “11.3 ATF, Draining and Filling”, page 115 .

– Remove the transmission fluid pan. Refer to
⇒ “2 Transmission Fluid Pan”, page 125 .

Protected by copyright. Copying for private or commercial purposes, in part or in whole, is not permitted unless authorised by Volkswagen AG. Volkswagen AG does not guarantee or accept any liability with respect to the correctness of information in this document. Copyright by Volkswagen AG.

– Remove the ATF screen. Refer to
⇒ “3 ATF Screen”, page 127 .

– Remove the valve body. Refer to
⇒ “4.2 Valve Body, Removing and Installing”, page 135 .

– Disconnect the connector -2- for the solenoid valves from the transmission connector.

– Remove the 14-pin transmission connector bolt.

– Remove the transmission connector with the wiring harness outward from the transmission housing.

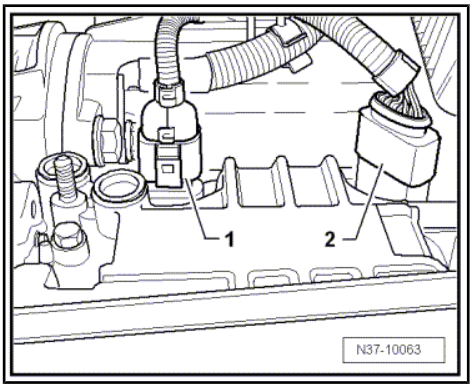

Installing

Install in reverse order of removal while. Note the following:

– Replace the O-ring on the transmission connector.

– Coat the O-ring with ATF.

– Push the transmission connector all the way into the transmission.

– Tighten the bolt for the 14-pin transmission connector. Refer to ⇒ “4.1.1 Tightening Specifications”, page 132 for the correct tightening specification.

– Install the valve body. Refer to ⇒ page 142 .

– Install the ATF screen. Refer to
⇒ “3 ATF Screen”, page 127 .

– Install the transmission fluid pan. Refer to
⇒ “2 Transmission Fluid Pan”, page 125 .

– Fill with ATF and check the level. Refer to
⇒ “11 ATF Level, Checking and Filling”, page 112 .

4.4 Sensor Wiring Harness (8-Pin Connector), Removing and Installing

Removing

– Drain the ATF. Refer to
⇒ “11.3 ATF, Draining and Filling”, page 115 .

– Remove the transmission fluid pan. Refer to
⇒ “2 Transmission Fluid Pan”, page 125 .

– Remove the ATF screen. Refer to
⇒ “3 ATF Screen”, page 127 .

– Remove the valve body. Refer to
⇒ “4.2 Valve Body, Removing and Installing”, page 135 .

Protected by copyright. Copying for private or commercial purposes, partially or in whole, is not permitted unless authorised by Volkswagen AG. Volkswagen AG does not guarantee or accept any liability with respect to the correctness of information in this document. Copyright by Volkswagen AG.

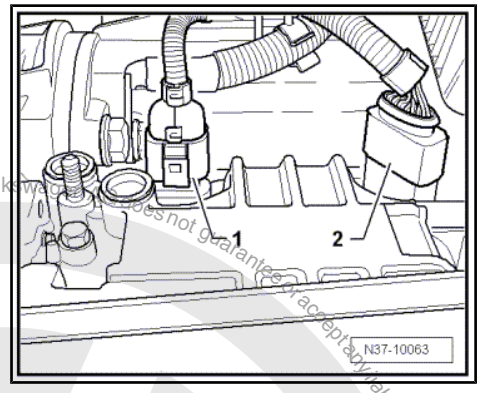

- Disconnect the sensor connector -1- from the transmission connector.
- Remove the bolt from the 8-pin transmission connector.
- Remove the transmission connector with the wiring harness outward from the transmission housing.

Installing

Install in reverse order of removal while. Note the following:

- Coat the O-ring with ATF.
- Push the transmission connector all the way into the transmission.
- Tighten the bolt for the 8-pin transmission connector to the tightening specification. Refer to ⇒ “4.1.1 Tightening Specifications”, page 132 .
- Install the valve body. Refer to ⇒ page 142 .
- Install the ATF screen. Refer to ⇒ “3 ATF Screen”, page 127.
- Install the transmission fluid pan. Refer to ⇒ “2 Transmission Fluid Pan”, page 125 .
- Fill with ATF and check the level. Refer to ⇒ “11 ATF Level, Checking and Filling”, page 112 .

4.5 Transmission Input Speed Sensor - G182- , Removing and Installing

Removing

- Remove the valve body. Refer to ⇒ “4.2 Valve Body, Removing and Installing”, page 135 .
- Remove the bolt -1- from the Transmission Input Speed Sensor - G182- .
- Remove the Transmission Input Speed Sensor - G182- from the transmission housing.

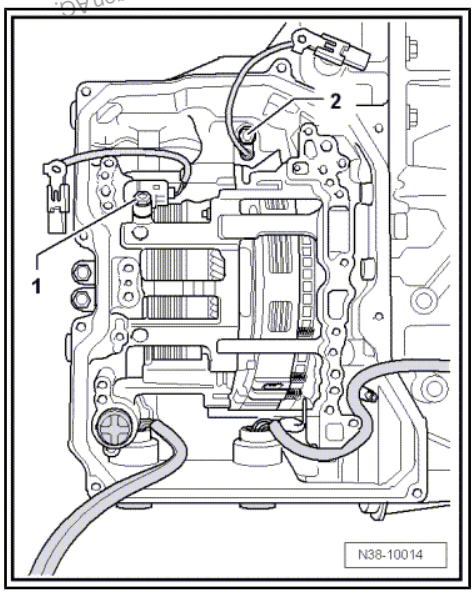

Protected by copyright. Copying for private or commercial purposes, in part or in whole, is not permitted unless authorised by Volkswagen AG. Volkswagen AG does not guarantee or accept any liability with respect to the correctness of information in this document. Copyright by Volkswagen AG.

Vehicles with a Generation 3 Transmission.

Installing

Install in reverse order of removal while. Note the following:

– Press the Transmission Input Speed Sensor - G182- all the way into the transmission housing.

– Tighten the bolt -1- for the Transmission Input Speed Sensor - G182- to the tightening specification. Refer to ⇒ “4.1.1 Tightening Specifications”, page 132 .

– Install the valve body. Refer to ⇒ page 142 .

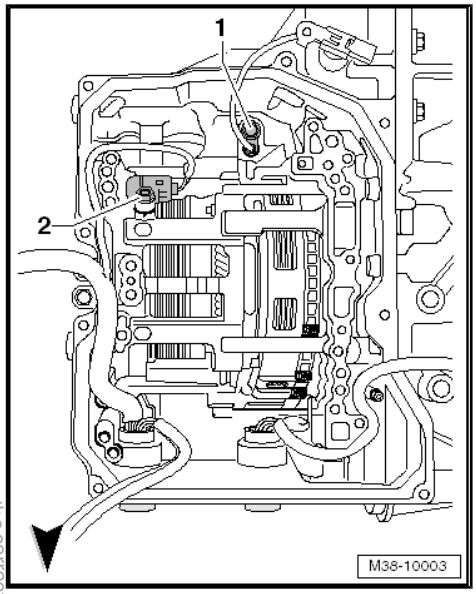

4.6 Transmission Output Speed Sensor - G195- , Removing and Installing

Removing

– Remove the valve body. Refer to ⇒ “4.2 Valve Body, Removing and Installing”, page 135 .

– Remove the bolt -2- from the Transmission Output Speed Sensor - G195- .

– Remove the Transmission Output Speed Sensor - G195- from the transmission housing.

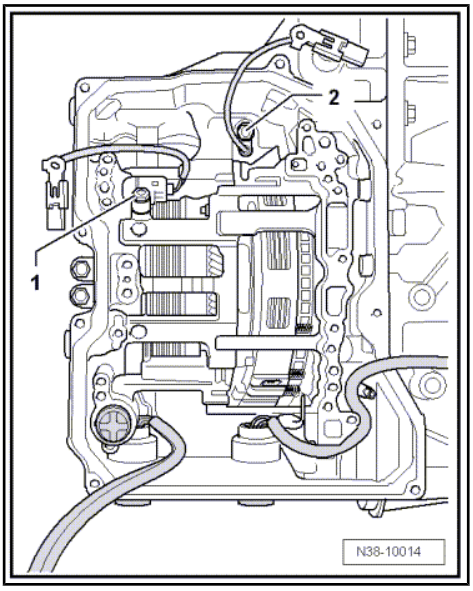

Protected by copyright. Copying for private or commercial purposes, in part or in whole, is not permitted unless authorised by Volkswagen AG. Volkswagen AG does not guarantee or accept any liability with respect to the correctness of information in this document. Copyright by Volkswagen AG.

Vehicles with a Generation 3 Transmission.

Installing

Install in reverse order of removal while. Note the following:

– Press the Transmission Output Speed Sensor - G195- all the way into the transmission housing.

– Tighten the bolt -2- for the Transmission Output Speed Sensor - G195- to the tightening specification. Refer to ⇒ “4.1.1 Tightening Specifications”, page 132 .

– Install the valve body. Refer to ⇒ page 142 .

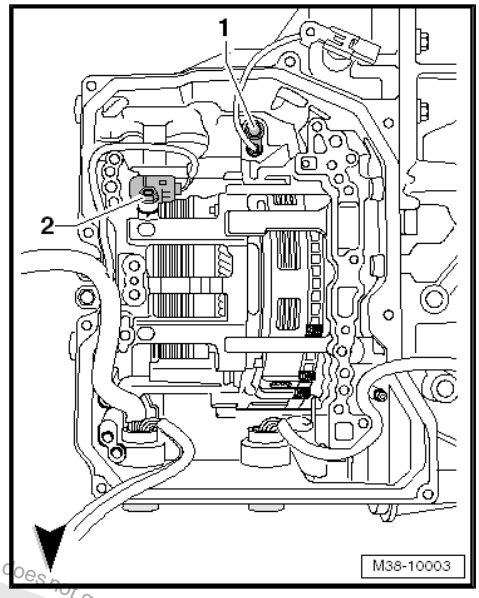

Protected by copyright. Copying for private or commercial purposes, in part or in whole, is not permitted unless authorised by Volkswagen AG. Volkswagen AG does not guarantee or accept any liability with respect to the correctness of information in this document. Copyright by Volkswagen AG.

Protected by copyright. Copyright by Volkswagen AG. Volkswagen AG does not guarantee or accept any liability with respect to the correctness of information in this document. Copyright by Volkswagen AG.
Protected by copyright. Copying for private or commercial purposes, in part or in whole, is not permitted unless authorised by Volkswagen AG.

5 Special Tools

Special tools and workshop equipment required

- Seal Installer - Selector Shaft Oil Seal - T10174-

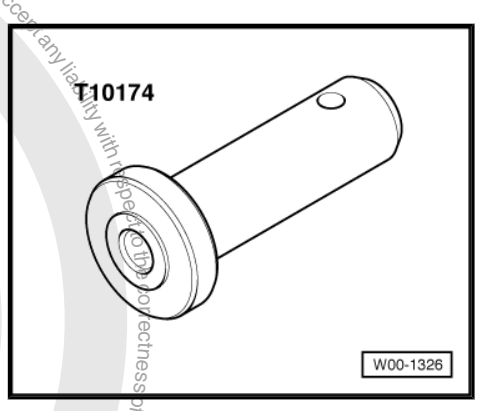

- Torque Wrench 1331 5-50Nm - VAG1331-

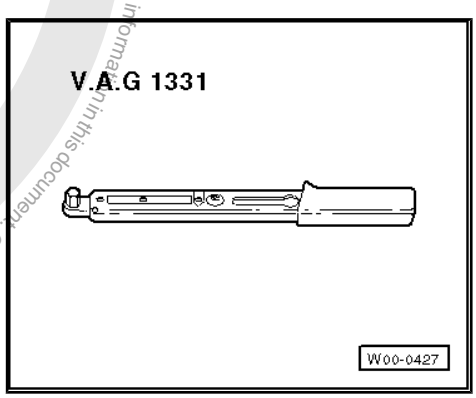

- Digital Torque Wrench - VAG1756A-

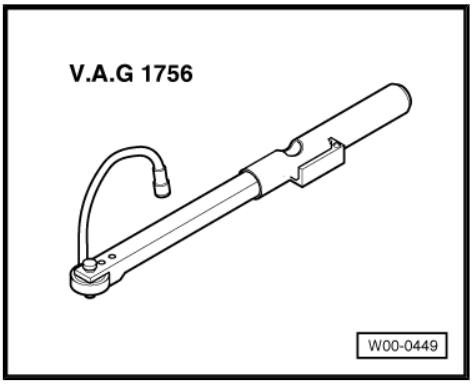

- Torque Wrench 1783 - 2-10Nm - VAG1783-

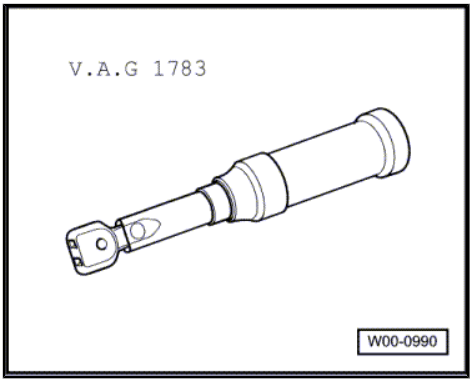

- Shop Crane - Drip Tray - VAS6208-

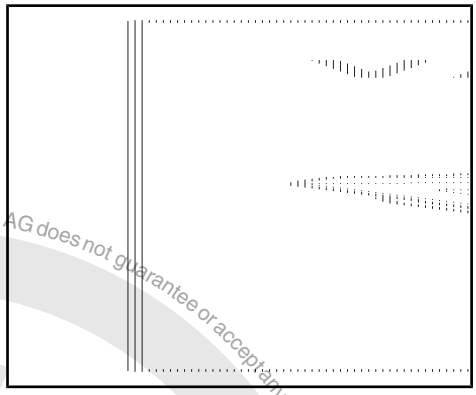

Protected by copyright. Copying for private or commercial purposes, in part or in whole, is not permitted unless authorised by Volkswagen AG. Volkswagen AG does not guarantee or accept any liability with respect to the correctness of information in this document. Copyright by Volkswagen AG.

39 – Final Drive, Differential

1 Flange Shaft Seals, Replacing

⇒ “1.1 Component Location Overview - Seals”, page 155

⇒ “1.2 Left Flange Shaft Seal, Replacing”, page 156

⇒ “1.3 Right Flange Shaft Seal, Replacing”, page 157

Brief Description

The seals for the flange shafts can be replaced with the transmission installed.

– On the left side, the driveshaft must be removed. Install the seal using the Seal Installer - Flange Shaft Oil Seal LH - T10176- .

– The drive axle remains in the wheel bearing on the right side. Install the seal using the Seal Installer - Flange Shaft Oil Seal RH - T10177- .

1.1 Component Location Overview - Seals

1 - Torque Converter Seal

❑ Replacing. Refer to ⇒ “1.4 Torque Converter Seal, Removing and Installing”, page 11 .

2 - Right Seal

❑ For the right flange shaft

❑ Replacing. Refer to ⇒ “1.3 Right Flange Shaft Seal, Replacing”, page 157 .

3 - Gearshift Shaft Seal

❑ Replacing. Refer to ⇒ “1 Selector Shaft Seal, Replacing”, page 124 .

4 - Left Seal

❑ For the left flange shaft

❑ Replacing. Refer to ⇒ “1.2 Left Flange Shaft Seal, Replacing”, page 156 .

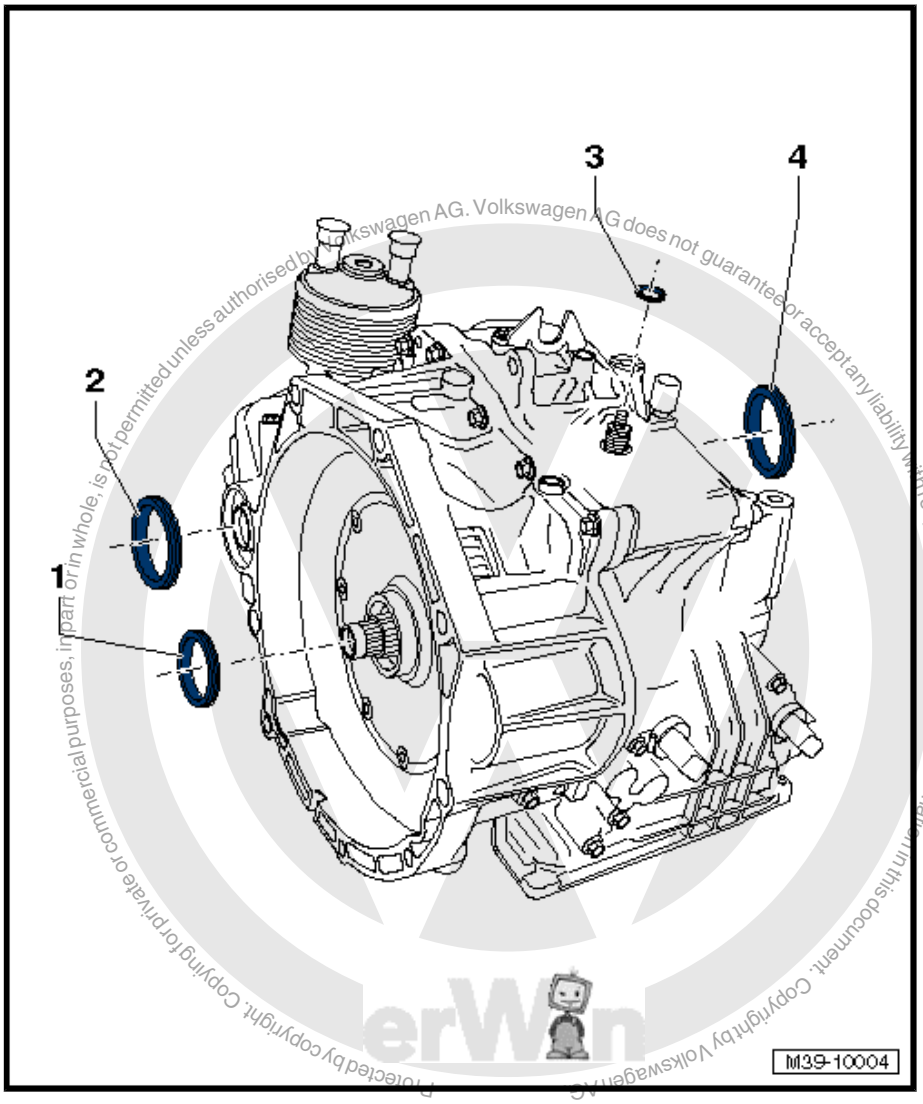

Protected by copyright. Copying for private or commercial purposes, in part or in whole, is not permitted unless authorised by Volkswagen AG. Volkswagen AG does not guarantee or accept any liability with respect to the correctness of information in this document. Copyright by Volkswagen AG.

1.2 Left Flange Shaft Seal, Replacing

Special tools and workshop equipment required

- Shop Crane - Drip Tray - VAS6208-
- Puller - Unit Injector - T10055-
- Seal Installer - Flange Shaft Oil Seal LH - T10176-

Removing

– Remove the noise insulation. Refer to ⇒ Body Exterior; Rep. Gr. 50 ; Noise Insulation .

– Remove the left drive axle. Refer to ⇒ Suspension, Wheels, Steering; Rep. Gr. 40 ; Drive Axles, Removing and Installing .

– Place the Drip Tray for example -VAS6208- under the transmission.

– Seal the opening in the transmission for the driveshaft with a clean cloth -A-.

– Carefully drill a 2 to 4 mm hole -B- into the outer metal ring -C- in the seal.

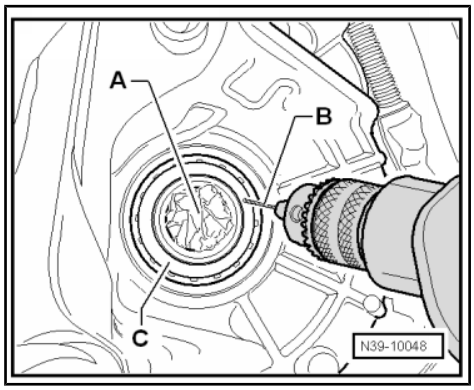

Note

- *Grease the drill bit -B- so that the shavings will stick.*
- *Drill only through the metal ring -C- otherwise the transmission could get damaged.*

– Install a 4 mm screw into the drilled hole in the gasket -arrow-.

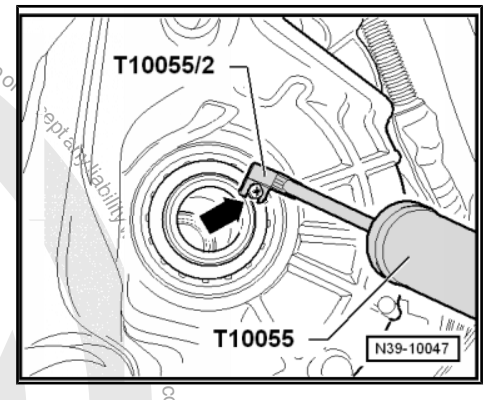

Note

- *Be careful not to install the screw too deep so that the bearing underneath does not become damaged.*
- *Remove the seal with the Puller - Unit Injector - T10055- and the Puller - Unit Injector - Adapter 2 - T10055/2- .*
- *Remove the cloths and carefully clean the transmission and the opening for the drive axle.*
- *Iron shavings must not get into the transmission or into the opening for the drive axle. Vacuum up any shavings if necessary.*
- *If only the metal ring of the seal could be removed, carefully pry out the rest of the seal using screwdriver.*

Installing

Install in reverse order of removal while. Note the following:

– Coat the outer circumference and the sealing lips on the new seal with ATF.

Installation position:

The open side of the seal faces the transmission.

Protected by copyright. Copying for private or commercial purposes, in part or in whole, is not permitted unless authorised by Volkswagen AG. Volkswagen AG does not guarantee or accept any liability with respect to the correctness of information in this document. Copyright by Volkswagen AG.

– Install the new seal using the Seal Installer - Selector Shaft Oil Seal - T10176- . Do not tilt the seal.

– Install the drive axle. Refer to ⇒ Suspension, Wheels, Steering; Rep. Gr. 40 ; Drive Axles, Removing and Installing .

– Check the ATF level and add if necessary. Refer to ⇒ “11 ATF Level, Checking and Filling”, page 112 .

– Install the noise insulation. Refer to ⇒ Body Exterior; Rep. Gr. 50 ; Noise Insulation .

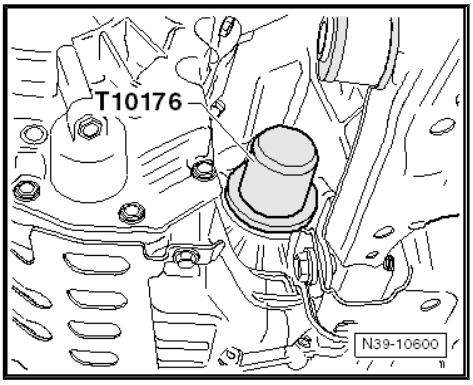

1.3 Right Flange Shaft Seal, Replacing

Special tools and workshop equipment required

- Shop Crane - Drip Tray - VAS6208-
- Puller - Unit Injector - T10055-
- Seal Installer - Flange Shaft Oil Seal RH - T10177-

Removing

– Remove the noise insulation. Refer to ⇒ Body Exterior; Rep. Gr. 50 ; Noise Insulation .

– If equipped, remove the heat shield above the right drive axle -arrows-.

– Remove the right drive axle from the transmission. Refer to ⇒ Suspension, Wheels, Steering; Rep. Gr. 40 ; Drive Axles, Removing and Installing .

– Tie up the drive axle as high as possible. Do not damage the paint on the drive axle.

– Place the Drip Tray for example Shop Crane - Drip Tray - VAS6208- under the transmission.

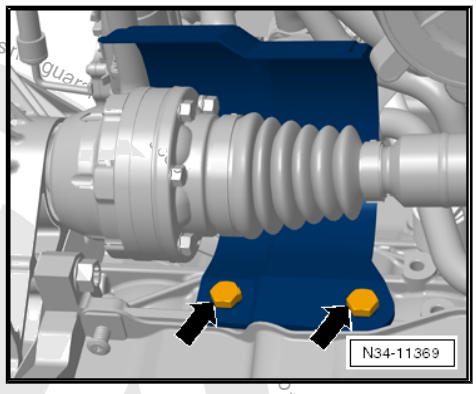

– Seal the opening in the transmission for the drive axle with a clean cloth -A-.

– Carefully drill a 2 to 4 mm hole -B- into the outer metal ring -C- in the seal.

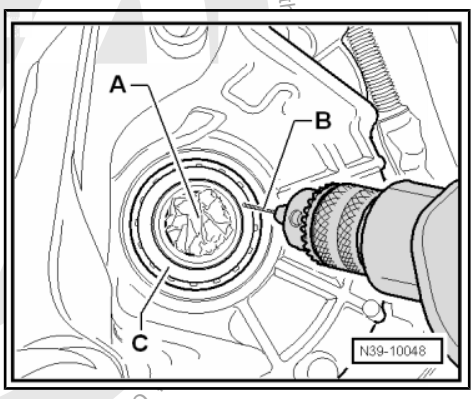

Note

- *Grease the drill bit -B- so that the shavings will stick.*
- *Drill only through the metal ring -C- otherwise the transmission could get damaged.*

Protected by copyright. Copying for private or commercial purposes, in part or in whole, is not permitted unless authorised by Volkswagen AG. Copyright by Volkswagen AG.

– Install a 4 mm screw into the drilled hole in the gasket -arrow-.

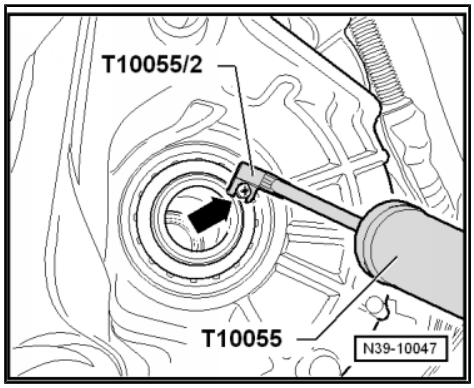

Note

- *Be careful not to install the screw too deep so that the bearing underneath does not become damaged.*
- *Remove the seal with the Puller - Unit Injector - T10055- and the Puller - Unit Injector - Adapter 2 - T10055/2- .*
- *Remove the cloths and carefully clean the transmission and the opening for the driveshaft.*
- *Iron shavings must not get into the transmission or into the opening for the driveshaft. Vacuum up any shavings if necessary.*
- *If only the metal ring of the seal could be removed, carefully pry out the rest of the seal using screwdriver.*

Installing

Install in reverse order of removal while. Note the following:

– Coat the outer circumference and the sealing lips on the new seal with ATF.

Installation position:

The open side of the seal faces the transmission.

– Install the new seal using the Seal Installer - Flange Shaft Oil Seal RH - T10177- . Do not tilt the seal.

– Mount the right drive axle to the transmission. Refer to ⇒ Suspension, Wheels, Steering; Rep. Gr. 40 ; Drive Axles, Removing and Installing .

– Check the ATF level and add if necessary. Refer to ⇒ “11 ATF Level, Checking and Filling”, page 112 .

– Install the noise insulation. Refer to ⇒ Body Exterior; Rep. Gr. 50 ; Noise Insulation .

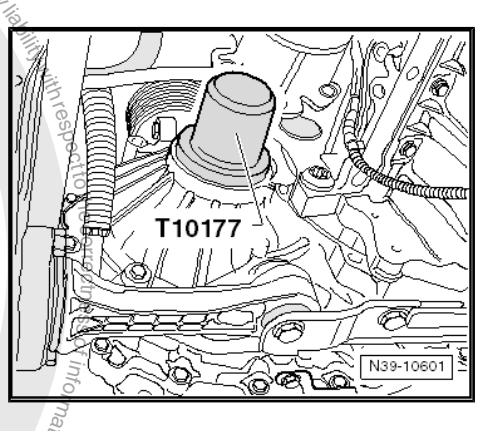

Protected by copyright. Copying for private or commercial purposes, in part or in whole, is not permitted unless authorised by Volkswagen AG. Volkswagen AG does not guarantee or accept any liability with respect to the correctness of information in this document. Copyright by Volkswagen AG.

2 Special Tools

Special tools and workshop equipment required

- Puller - Unit Injector - T10055-

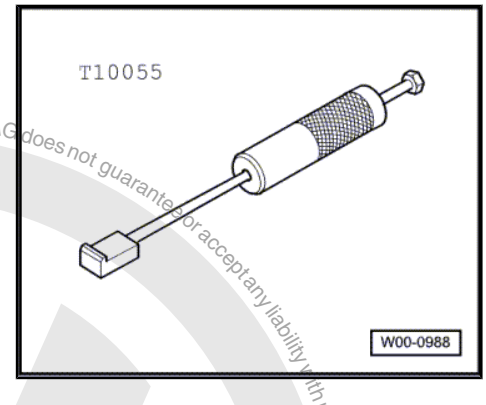

- Seal Installer - Flange Shaft Oil Seal LH - T10176-

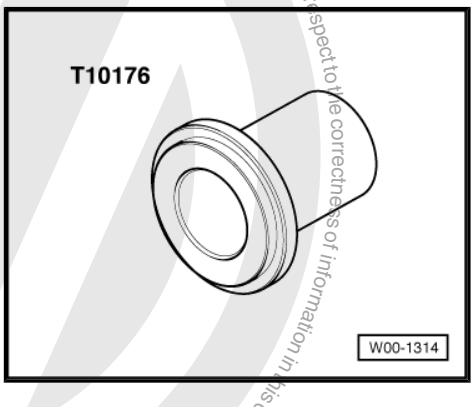

- Seal Installer - Flange Shaft Oil Seal RH - T10177-

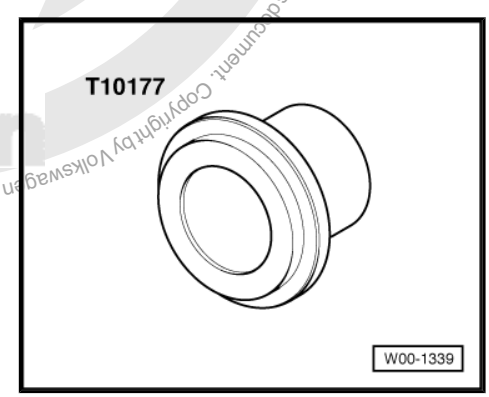

- Shop Crane - Drip Tray - VAS6208-

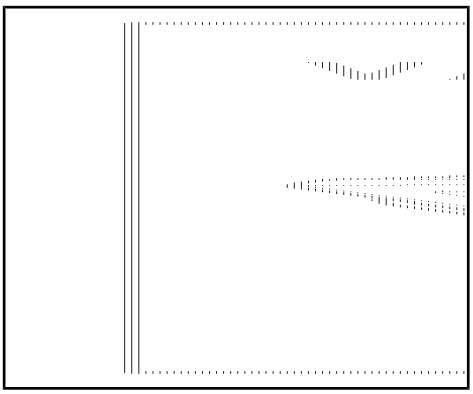

Protected by copyright. Copying for private or commercial purposes, in part or in whole, is not permitted unless authorised by Volkswagen AG. Volkswagen AG does not guarantee or accept any liability with respect to the correctness of information in this document. Copyright by Volkswagen AG.

Protected by copyright. Copyright by Volkswagen AG. Volkswagen AG does not guarantee or accept any liability with respect to the correctness of information in this document. Copyright by Volkswagen AG.
Protected by copyright. Copying for private or commercial purposes, in part or in whole, is not permitted unless authorised by Volkswagen AG.

3 Revision History

DRUCK NUMBER: MEX5R005321

Factory Edition	Edit Edition	Job Type	Feedback	Notes	Quality Checked By
07.2015	07/20/2015	Factory Update	1092982 & 1098967	Updated the HRV and quantity and size of bolts for gen 3 - Valve Body R&I	Eric P.
04.2015	6/17/2015	Reformat	N/A		Jim H
04.2015	04/03/2015	Local Feedback	1084514 & 1085374		Eric P
04.2015	10/14/2014	Local Feedback	1047957		Eric P

Cautions & Warnings

Please read these WARNINGS and CAUTIONS before proceeding with maintenance and repair work. You must answer that you have read and you understand these WARNINGS and CAUTIONS before you will be allowed to view this information.

- If you lack the skills, tools and equipment, or a suitable workshop for any procedure described in this manual, we suggest you leave such repairs to an authorized Volkswagen retailer or other qualified shop. We especially urge you to consult an authorized Volkswagen retailer before beginning repairs on any vehicle that may still be covered wholly or in part by any of the extensive warranties issued by Volkswagen.

- Disconnect the battery negative terminal (ground strap) whenever you work on the fuel system or the electrical system. Do not smoke or work near heaters or other fire hazards. Keep an approved fire extinguisher handy.

- Volkswagen is constantly improving its vehicles and sometimes these changes, both in parts and specifications, are made applicable to earlier models. Therefore, part numbers listed in this manual are for reference only. Always check with your authorized Volkswagen retailer parts department for the latest information.

- Any time the battery has been disconnected on an automatic transmission vehicle, it will be necessary to reestablish Transmission Control Module (TCM) basic settings using the VAG 1551 Scan Tool (ST).

- Never work under a lifted vehicle unless it is solidly supported on stands designed for the purpose. Do not support a vehicle on cinder blocks, hollow tiles or other props that may crumble under continuous load. Never work under a vehicle that is supported solely by a jack. Never work under the vehicle while the engine is running.

- For vehicles equipped with an anti-theft radio, be sure of the correct radio activation code before disconnecting the battery or removing the radio. If the wrong code is entered when the power is restored, the radio may lock up and become inoperable, even if the correct code is used in a later attempt.

- If you are going to work under a vehicle on the ground, make sure that the ground is level. Block the wheels to keep the vehicle from rolling. Disconnect the battery negative terminal (ground strap) to prevent others from starting the vehicle while you are under it.

- Do not attempt to work on your vehicle if you do not feel well. You increase the danger of injury to yourself and others if you are tired, upset or have taken medicine or any other substances that may impair you or keep you from being fully alert.

- Never run the engine unless the work area is well ventilated. Carbon monoxide (CO) kills.

- Always observe good workshop practices. Wear goggles when you operate machine tools or work with acid. Wear goggles, gloves and other protective clothing whenever the job requires working with harmful substances.

- Tie long hair behind your head. Do not wear a necktie, a scarf, loose clothing, or a necklace when you work near machine tools or running engines. If your hair, clothing, or jewelry were to get caught in the machinery, severe injury could result.

- Do not re-use any fasteners that are worn or deformed in normal use. Some fasteners are designed to be used only once and are unreliable and may fail if used a second time. This includes, but is not limited to, nuts, bolts, washers, circlips and cotter pins. Always follow the recommendations in this manual - replace these fasteners with new parts where indicated, and any other time it is deemed necessary by inspection.

next

© 2002 Volkswagen of America, Inc.
All rights reserved. Information contained in this document is based on the latest information available at the time of printing and is subject to the copyright and other intellectual property rights of Volkswagen of America, Inc., its affiliated companies and its licensors. All rights are reserved to make changes at any time without notice. No part of this document may be reproduced, stored in a retrieval system, or transmitted in any form or by any means, electronic, mechanical, photocopying, recording, or otherwise, nor may these materials be modified or reposted to other sites, without the prior expressed written permission of the publisher.
Version 1.0

Cautions & Warnings

- Illuminate the work area adequately but safely. Use a portable safety light for working inside or under the vehicle. Make sure the bulb is enclosed by a wire cage. The hot filament of an accidentally broken bulb can ignite spilled fuel or oil.

- Friction materials such as brake pads and clutch discs may contain asbestos fibers. Do not create dust by grinding, sanding, or by cleaning with compressed air. Avoid breathing asbestos fibers and asbestos dust. Breathing asbestos can cause serious diseases such as asbestosis or cancer, and may result in death.

- Finger rings should be removed so that they cannot cause electrical shorts, get caught in running machinery, or be crushed by heavy parts.

- Before starting a job, make certain that you have all the necessary tools and parts on hand. Read all the instructions thoroughly; do not attempt shortcuts. Use tools that are appropriate to the work and use only replacement parts meeting Volkswagen specifications. Makeshift tools, parts and procedures will not make good repairs.

- Catch draining fuel, oil or brake fluid in suitable containers. Do not use empty food or beverage containers that might mislead someone into drinking from them. Store flammable fluids away from fire hazards. Wipe up spills at once, but do not store the oily rags, which can ignite and burn spontaneously.

- Use pneumatic and electric tools only to loosen threaded parts and fasteners. Never use these tools to tighten fasteners, especially on light alloy parts. Always use a torque wrench to tighten fasteners to the tightening torque listed.

- Keep sparks, lighted matches, and open flame away from the top of the battery. If escaping hydrogen gas is ignited, it will ignite gas trapped in the cells and cause the battery to explode.

- Be mindful of the environment and ecology. Before you drain the crankcase, find out the proper way to dispose of the oil. Do not pour oil onto the ground, down a drain, or into a stream, pond, or lake. Consult local ordinances that govern the disposal of wastes.

- The air-conditioning (A/C) system is filled with a chemical refrigerant that is hazardous. The A/C system should be serviced only by trained automotive service technicians using approved refrigerant recovery/recycling equipment, trained in related safety precautions, and familiar with regulations governing the discharging and disposal of automotive chemical refrigerants.

- Before doing any electrical welding on vehicles equipped with anti-lock brakes (ABS), disconnect the battery negative terminal (ground strap) and the ABS control module connector.

- Do not expose any part of the A/C system to high temperatures such as open flame. Excessive heat will increase system pressure and may cause the system to burst.

- When boost-charging the battery, first remove the fuses for the Engine Control Module (ECM), the Transmission Control Module (TCM), the ABS control module, and the trip computer. In cases where one or more of these components is not separately fused, disconnect the control module connector(s).

- Some of the vehicles covered by this manual are equipped with a supplemental restraint system (SRS), that automatically deploys an airbag in the event of a frontal impact. The airbag is operated by an explosive device. Handled improperly or without adequate safeguards, it can be accidentally activated and cause serious personal injury. To guard against personal injury or airbag system failure, only trained Volkswagen Service technicians should test, disassemble or service the airbag system.

Protected by copyright. Copying for private or commercial purposes, in part or in whole, is not permitted unless authorized by Volkswagen AG. Volkswagen AG does not guarantee or accept any liability with respect to the correctness of information in this document. Copyright by Volkswagen AG.

back next

© 2002 Volkswagen of America, Inc.
All rights reserved. Information contained in this document is based on the latest information available at the time of printing and is subject to the copyright and other intellectual property rights of Volkswagen of America, Inc., its affiliated companies and its licensors. All rights are reserved to make changes at any time without notice. No part of this document may be reproduced, stored in a retrieval system, or transmitted in any form or by any means, electronic, mechanical, photocopying, recording, or otherwise, nor may these materials be modified or reposted to other sites, without the prior expressed written permission of the publisher.
Version 1.0

Cautions & Warnings

- Do not quick-charge the battery (for boost starting) for longer than one minute, and do not exceed 16.5 volts at the battery with the boosting cables attached. Wait at least one minute before boosting the battery a second time.

- Never use a test light to conduct electrical tests of the airbag system. The system must only be tested by trained Volkswagen Service technicians using the VAG 1551 Scan Tool (ST) or an approved equivalent. The airbag unit must never be electrically tested while it is not installed in the vehicle.

- Some aerosol tire inflators are highly flammable. Be extremely cautious when repairing a tire that may have been inflated using an aerosol tire inflator. Keep sparks, open flame or other sources of ignition away from the tire repair area. Inflate and deflate the tire at least four times before breaking the bead from the rim. Completely remove the tire from the rim before attempting any repair.

- When driving or riding in an airbag-equipped vehicle, never hold test equipment in your hands or lap while the vehicle is in motion. Objects between you and the airbag can increase the risk of injury in an accident.

I have read and I understand these Cautions and Warnings.

back OK

Protected by copyright. Copying for private or commercial purposes, in part or in whole, is not permitted unless authorised by Volkswagen AG. Volkswagen AG does not guarantee or accept any liability with respect to the correctness of information in this document. Copyright by Volkswagen AG.

© 2002 Volkswagen of America, Inc.
All rights reserved. Information contained in this document is based on the latest information available at the time of printing and is subject to the copyright and other intellectual property rights of Volkswagen of America, Inc., its affiliated companies and its licensors. All rights are reserved to make changes at any time without notice. No part of this document may be reproduced, stored in a retrieval system, or transmitted in any form or by any means, electronic, mechanical, photocopying, recording, or otherwise, nor may these materials be modified or reposted to other sites, without the prior expressed written permission of the publisher.
Version 1.0